Dynamix UM-SNB

User Manual

Version 1.00

Tables of Contents

1. INTRODUCTION 4

1.1 FEATURES 5

1.2 SPECIFICATION 5

1.3 APPLICATIONS 8

2. GETTING TO KNOW ABOUT THE UM-SNB NTU 9

2.1 FRONT PANEL 9

2.1.1. E1 interface model 9

2.1.2. Serial interface model 9

2.1.3. Ethernet interface model 10

2.1.4. Multi-interfaces model 10

2.2 REAR PANEL 12

2.2.1. E1/T1 Interface Model 12

2.2.2. Serial Interface Model 14

2.2.3. Ethernet Interface Model 15

2.2.4. Multi-interfaces in one Model 16

2.3 INSTALLATION 18

2.3.1. E1/T1 Interface 19

2.3.2. Serial Interface 21

2.3.3. Ethernet Interface 23

3. CONFIGURATION WITH KEYPAD AND LCD 25

3.1 KEYPAD 25

3.2 MAIN MENU TREE 26

3.3 MENU TREE FOR SHOW STATUS 29

3.4 MENU TREE FOR SHOW STATISTICS 31

3.4.1. Show Statistic on E1 Interface 33

3.4.2. Show Statistic on Serial/Ethernet/T1 Interface 34

3.5 MENU TREE FOR SYSTEM SETUP 35

3.5.1. Sub-Menu tree for SETUP SHDSL 36

3.5.2. Sub-Menu tree for SETUP E1 Interface 37

3.5.3. Sub-Menu tree for SETUP SERIAL Interface 41

3.5.4. Sub-menu tree for SETUP Ethernet Interface 44

3.5.5. Sub-menu tree for SETUP T1 Interface 45

3.5.6. Application of STU-R configuration follow STU-C 47

3.5.7. Application of Multi-interface 48

3.6 SUB-MENU TREE FOR REBOOT SYSTEM 61

3.7 SUB-MENU TREE FOR DISGNOSTIC 62
3.7.1. Loopback function 62
3.7.2. BER Test function 65
4. PARAMETERS TABLE 66
4.1 UM-SNB/E1/UM-SNB/E1/4W 66
4.1.1. UM-SNB/E1/UM-SNB/E1/4w E1 Interface Model -- E1 interface mode 66
4.2 UM-SNB/35/ UM-SNB/35/4W 67
4.2.1. UM-SNB/35/ UM-SNB/35/4w Serial Interface Model -- Serial interface mode 67
4.3 UM-SNB/L / UM-SNB/L/4W 68
4.3.1. UM-SNB/L / UM-SNB/L/4w Ethernet Interface model-- Ethernet interface mode 68
4.4 UM-SNB/3IN1/UM-SNB/3IN1/4W 69
4.4.1. UM-SNB/3in1/ UM-SNB/3in1/4w E1+Serial+Ethernet interface model -- E1 Interface mode. 69
4.4.2. UM-SNB/3in1 / UM-SNB/3in1/4w E1+Serial+Ethernet interface model -- Serial Interface mode 70
4.4.3. UM-SNB/3in1 / UM-SNB/3in1/4w E1+Serial+Ethernet interface model -- Ethernet Interface mode 71
4.4.4. UM-SNB/3in1 / UM-SNB/3in1/4w E1+Serial+Ethernet interface model -- E1+Serial Interface mode 72
4.4.5. UM-SNB/3in1 / UM-SNB/3in1/4w E1+Serial+Ethernet interface model -- E1+Ethernet Interface mode 73
4.5 UM-SNB/703/UM-SNB/703/4W 74
4.5.1. UM-SNB/703 / UM-SNB/703/4w E1+T1 interface model -- E1 Interface mode 74
4.5.2. UM-SNB/703 / UM-SNB/703/4w E1+T1 interface model -- T1 Interface mode 75
4.6 UM-SNB/4IN1/UM-SNB/4IN1/4W 76
4.6.1. UM-SNB/4in1 / UM-SNB/4in1/4w E1+T1+Serial + Ethernet interface model -- E1 Interface mode 76
4.6.2. UM-SNB/4in1 / UM-SNB/4in1/4w E1+T1 +Serial+ Ethernet interface model -- T1 Interface mode 77
4.6.3. UM-SNB/4in1 / UM-SNB/4in1/4w E1+T1 +Serial+ Ethernet interface model -- Serial Interface mode 78
4.6.4. UM-SNB/4in1 / UM-SNB/4in1/4w E1+T1 +Serial+ Ethernet interface model -- Ethernet Interface mode 79
4.6.5. UM-SNB/4in1 / UM-SNB/4in1/4w E1+T1 +Serial+ Ethernet interface model -- E1+ Serial Interface mode 80
4.6.6. UM-SNB/4in1 / UM-SNB/4in1/4w E1+T1 +Serial+ Ethernet interface model -- E1 + Ethernet Interface mode 81
4.6.7. UM-SNB/4in1 / UM-SNB/4in1/4w E1+T1 +Serial+ Ethernet interface model -- T1+ Serial Interface mode 82
4.6.8. UM-SNB/4in1 / UM-SNB/4in1/4w E1+T1 +Serial+ Ethernet interface model -- T1 + Ethernet Interface mode 83

5. CONFIGURATION WITH CONSOLE PORT 84

5.1 LOGIN PROCEDURE 84
5.2 WINDOW STRUCTURE 85
5.3 MAIN MENU SUMMARY 87
5.4 CONFIGURATION 88
5.4.1. Configure NTU Interface 89
5.4.2. Configure SHDSL parameters 90
5.4.3. Configure E1 parameters 94
5.4.4. Configure Serial parameters 103
5.4.5. Configure Ethernet parameter 107
5.4.6. Configure T1 parameter 110
5.4.7. Remote configuration 114
5.4.8. Restore factory default 115
5.5 REBOOT 118
5.6 VIEW THE SYSTEM STATUS 119
5.6.1. View the SHDSL status 119
5.6.2. View the Interface status 120
5.6.3. View the Statistics 123
5.7 VIEW SYSTEM CONFIGURATION 128
5.7.1. Show system Information 128
5.7.2. Show system with listing format 130
5.7.3. Show system with script format 132
5.8 UPGRADE 136
5.9 DIAGNOSTIC 140
5.10 EXIT 143

6. APPENDIX 145

6.1 ABBREVIATION 145
6.2 SERIAL INTERFACE PIN ASSIGNMENTS 148
6.3 V.35 DB25(M) TO M.34(F) ADAPTOR CABLE 150
6.4 X.21 DB25(M) TO DB15(F) ADAPTOR CABLE 153
6.5 CONSOLE CABLE 155
6.6 E1/T1 BALANCED CABLE 157
6.7 E1 UNBALANCED CABLE 158
6.8 ETHERNET CABLE 159
6.9 DSL CABLE 160
6.10 POWER CORD 161
6.11 ILLUSTRATION OF LOOPBACK CONNECTION DEVICE (E1) 162
6.12 ILLUSTRATION OF LOOPBACK CONNECTION DEVICE (SERIAL) 163

1. Introduction

The UM-SNB offers four different interfaces (E1,T1, Serial and Ethernet) connecting customers to high-speed TDM services. This series have 12 models as following:-

E1 interface model (UM-SNB/E1 , UM-SNB/E1/4w):

It offers two different ways to connect customers a high-speed TDM services with two G.703 E1 interfaces (Balanced 120Ω RJ45 jack and Unbalanced 75Ω dual BNCs). The G.703 interface will carry from 64kbps to 2.048Mbps.

Serial interface model (UM-SNB/35 , UM-SNB/35/4w):

It offers the customers premise a high-speed TDM service with a DB25 interface. The industry standard DB25 interface can be configured as a V.35/RS530 or V.36/X.21 connection. The DB25 interface can transfers data up to 5.696Mbps (for 2-wire model) or up to 11.392Mbps (for 4-wire model).

Ethernet interface model (UM-SNB/L , UM-SNB/L/4w):

It offers the customers premise a high-speed TDM services with a LAN interface. The industry standard LAN interface can detect a 10M or 100M connection automatically.

(2 in 1)Multi-interface model (E1+T1) (UM-SNB/703 , UM-SNB/703/4w):

It offers two different ways to connect customers a high-speed TDM services with G.703 E1 interface (balanced 120Ω RJ45 jack and unbalanced 75Ω dual BNCs) and T1 interface(balanced 100Ω RJ45 jack). The G.703 interface will carry from 64kbps to 2.048Mbps for E1 and 64kbps to 1.544Mbps for T1

(3 in 1)Multi-interface model (E1+Serial+Ethernet) (UM-SNB/3in1 , UM-SNB/3in1/4w):

It offers three types of interface: E1 interface (balanced 120Ω RJ45 jack and unbalanced 75Ω dual BNCs), Serial interface (DB25 female connector) and Ethernet interface (RJ-45 connector).You can select one of the following: (a) E1 interface only (b)Serial interface only (c) Ethernet interface only (d) E1 and Serial interface (e)E1 and Ethernet interface.

(4 in 1)Multi-interface model (E1+T1+Serial+Ethernet) (UM-SNB/4in1 , UM-SNB/4in1/4w):

It offers three types of interface: E1 interface (balanced 120Ω RJ45 jack and unbalanced 75Ω dual BNCs), T1 interface (balanced 120Ω RJ45 jack),Serial interface (DB25 female connector) and Ethernet interface (RJ-45 connector).You can select one of the following: (a) E1 interface only (b) T1 interface only (c)Serial interface only (d) Ethernet interface only (e) E1 and Serial interface (f)E1 and Ethernet interface (g) T1 and Serial interface (h)T1 and Ethernet interface.

They can be configured and managed via EOC, or menu-driven VT100 compatible Asynchronous Terminal Interface, either locally or remotely.

The UM-SNB NTU is equipped with an auto rate capability that identifies the maximum line rate supported by the copper loop. This powerful automatic configuration capability makes installation and service provisioning simple and painless. Further

flexibility is provided as the ability to manually set the maximum NTU speed at different levels for different customer-tailored service offerings.

1.1 Features

- Standard G.SHDSL.Bis ITU G.991.2 (2004) supports improved reach/speed and greater interoperability
- Fast and cost-effective provisioning of traditional frame relay (FR or T-HDLC) or TDM leased line services
- User existing copper loop infrastructures
- Can operate in point to point connection
- Efficient single wire pair usage
- Up to 5.696Mbps(2-wire) or 11.392Mbps(4-wire) symmetric service bit rate
- Auto rate installation maximizes data rate based on loop conditions
- Auto configuration wetting current to protect SHDSL line
- Local management interface with LCD display
- Remote line loopback
- SHDSL Line performance monitoring
- Raw and per time interval statistics
- Bandwidth guaranteed transmission equipment
- Remote firmware upgrade

1.2 Specification

WAN Interface

- Line Rate: ITU G.991.2 (2004)
- Coding: trellis coded pulse amplitude modulation (TC-PAM16 and TC-PAM32)
- Support: Annex A ,B , F and G
- Payload rates: 64Kps to 5.696Mbps (N=1 to 89) for 2-wire model
  128Kbps to11.392Mbps (N=2 to 178) for 4-wire model
- Connection: RJ-45 jack (2-wire or 4-wire)
- Impedance: 135 ohms

G.703 Interface (as E1)

- Connection: RJ-48C for balanced 120Ω E1 cable and BNC for unbalanced 75Ω E1 cable
- Line Rate : 2048KHz +/- 50ppm
- Line code: HDB3/AMI
- Framing : PCM30/PCM30C/PCM31/PCM31C and Unframed
- Data Rate : 64Kbps to 2.048Mbps (Nx64Kbps , N=1 to 32)
- Operation : Full E1 and Fractional E1

G.703 Interface (as T1)

- Connection: RJ-48C for balanced 100Ω T1 cable
- Line Rate : 1544KHz +/- 50ppm

- Line code: B8ZS
- Framing: SF/ESF/Unframed
- Data Rate : 64kbps to 1.536Mbps (N=1 to 24)
- Operation : Clear Channel and Factional T1

Serial Interface (as RS-530/V.35/X.21)

- Payload rates: Up to 5.696Mbps(for 2-wire model) or Up to 8.192Mbps(for 4-wire model)
- Support V.35/RS-530 or V.36/X.21

LAN Interface (as Ethernet)

- Single Ethernet Interface
- 10/100Mpbs Half/Full Duplex, Auto-sensing, Auto-Crossover
- Up to 1024 MAC address learning, filtering bridge

DSL Timing

- Internal
- From E1/T1 Recovery (as E1/T1)
- From DTE (as V.35 and Ethernet)

Performance Monitoring

- ES, SES, UAS, LOWS for SHDSL
- ES, SES, UAS for E1
- Alarms and Errors for SHDSL or interface

Loopback Tests (for E1, T1 and V.35 interface only)

- Local Digital Loopback
- Local Loopback
- Remote Line Loopback
- Remote Payload Loopback
- Far-end Line Loopback
- Far-end Payload Loopback
- V.54 Loopback (for V.35 interface)
- Build-in 2047(2^{11}-1) bit BER tester

Management

- Configuration with keypads and LCD display
- Console port (RJ45 , RS232C)
- Support firmware upgradeable

Physical/Electrical

- Dimensions: 19.8 x 4.6 x 16.8 cm
- AC Input: 90~240V with 50~60Hz
- DC Input: -48V

- Power Consumption: 10W Max
- Operation temperature: 0 to 50°C
- Humidity: Up to 95% (non-condensing)
- External screw for frame grounding

Products Information:

	Interface	2-wire	4-wire
Single Interface model	E1	UM-SNB/E1	UM-SNB/E1/4w
	Serial	UM-SNB/35	UM-SNB/35/4w
	Ethernet	UM-SNB/L	UM-SNB/L/4w
Multi Interface model	E1+T1	UM-SNB/703	UM-SNB/703/4w
	E1+Series+Ethernet	UM-SNB/3in1	UM-SNB/3in1/4w
	E1+T1+Serial+Ethernet	UM-SNB/4in1	UM-SNB/4in1/4w

1.3 Applications

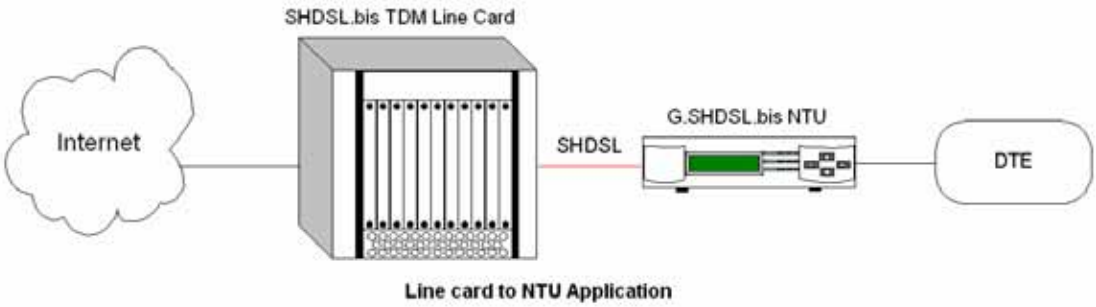

Line card to NTU Application

NTU to NTU Application

2. Getting to know about the UM-SNB NTU

This chapter shows the front and rear panel and how to install the hardware.

The models listing on UM-SNB NTU series:

Interface type	2/4 wires	AC Power supply	DC Power supply	AC & DC Dual Power supply
E1	2	UM-SNB/E1/A	UM-SNB/E1/D	UM-SNB/E1/AD
	4	UM-SNB/E1/4w/A	UM-SNB/E1/4w/D	UM-SNB/E1/4w/AD
Serial	2	UM-SNB/35/A	UM-SNB/35/D	UM-SNB/35/AD
	4	UM-SNB/35/4w/A	UM-SNB/35/4w/D	UM-SNB/35/4w/AD
Ethernet	2	UM-SNB/L/A	UM-SNB/L/D	UM-SNB/L/AD
	4	UM-SNB/L/4w/A	UM-SNB/L/4w/D	UM-SNB/L/4w/AD
E1+T1	2	UM-SNB/703/A	UM-SNB/703/D	UM-SNB/703/AD
	4	UM-SNB/703/4w/A	UM-SNB/703/4w/D	UM-SNB/703/4w/AD
E1+Serial+Ethernet	2	UM-SNB/3in1/A	UM-SNB/3in1/D	UM-SNB/3in1/AD
	4	UM-SNB/3in1/4w/A	UM-SNB/3in1/4w/D	UM-SNB/3in1/4w/AD
E1+T1+Serial+Ethernet	2	UM-SNB/4in1/A	UM-SNB/4in1/D	UM-SNB/4in1/AD
	4	UM-SNB/4in1/4w/A	UM-SNB/4in1/4w/D	UM-SNB/4in1/4w/AD

2.1 Front Panel

2.1.1. E1 interface model

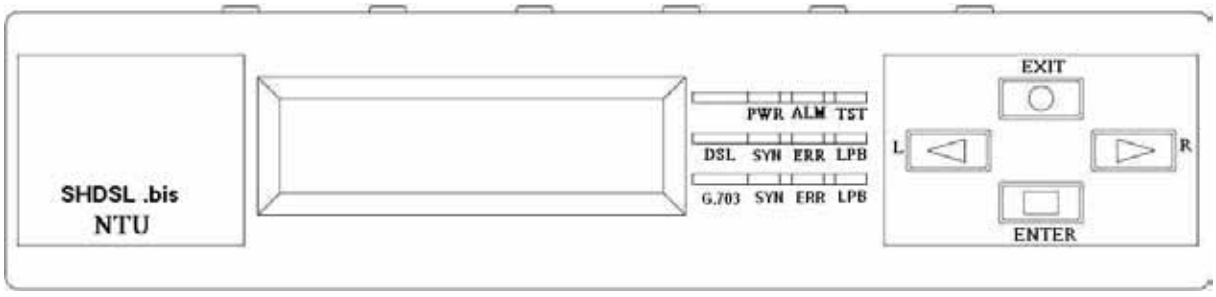

2.1.2. Serial interface model

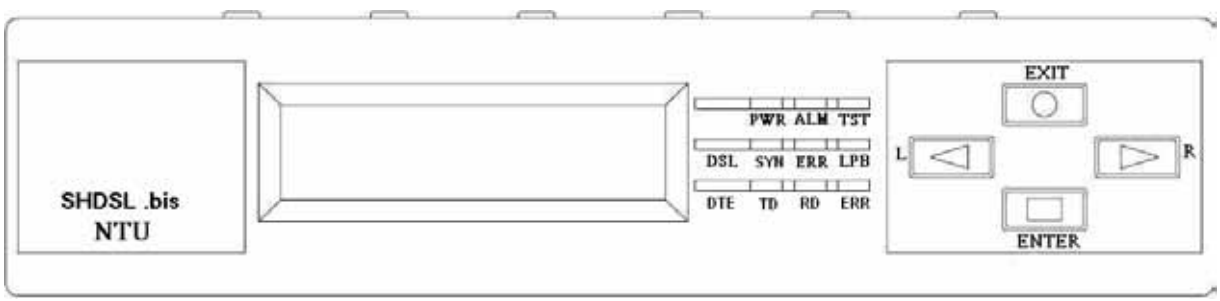

2.1.3. Ethernet interface model

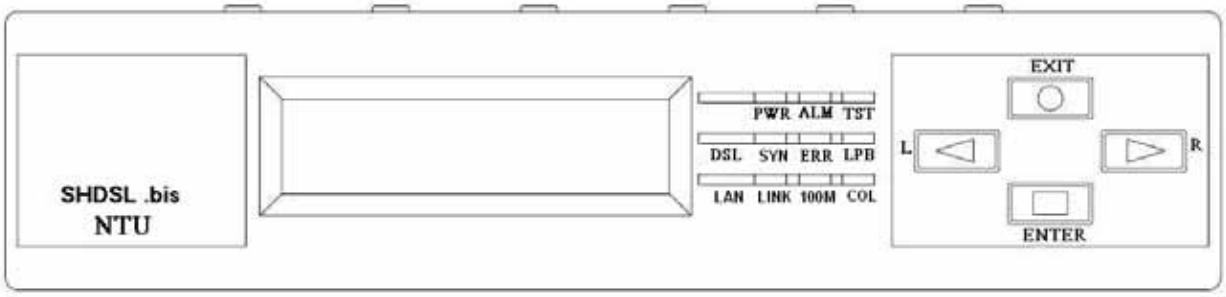

2.1.4. Multi-interfaces model

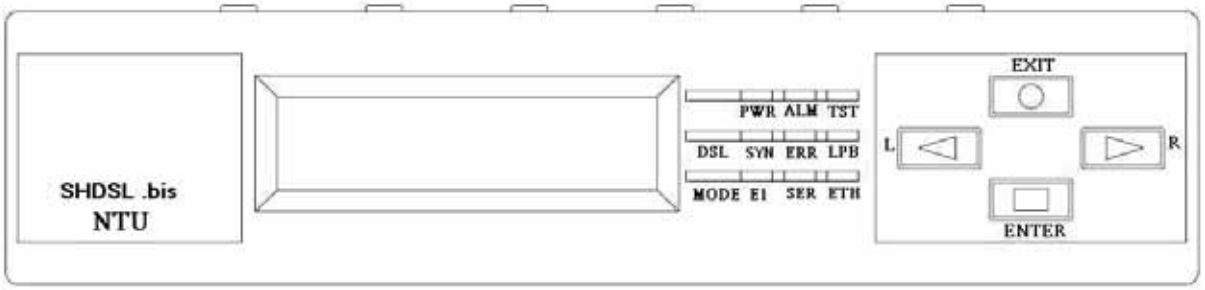

Front panel can be separated into three parts: LCD display, LED indicator and Keypads.

The LCD display can show the status and configuration of the device. The local management interface will be done by keypad with this LCD display.

The purpose of the keypad is to configure the setting or function selection on this NTU.

The following table describes the LEDs' functions of the SHDSL.bis NTU:

LED		Color	Action	Description
PWR		Green	On	Power is on.
			Off	Power is off.
ALM		Red	On	System loss.
			Off	System is working nomarally.
TST		Yellow	On	System is testing for connection.
			Off	System is working nomarlly.
SHDSL	SYN	Green	On	SHDSL line is connected.
			Blink	Data transmit in SHDSL line.
			Off	SHDSL line is dropped.
	ERR	Red	Blink	Error second occurs.
			Off	No error second.
	LPB	Yellow	On	Loopback is on.

			Off	Loopback is off.
E1	SYN	Green	On	E1 line is connected.
			Off	E1 line is dropped.
	ERR	Red	Blink	There are error seconds.
			Off	There is not any error second.
	LPB	Yellow	On	Loopback is on.
			Off	Loopback is off.
V.35	TD	Green	On	Data transmit in V.35.
			Off	No data transmit in V.35.
	RD	Green	On	Data receive in V.35.
			Off	No data reveive in V.35.
	ERR	Red	Blink	Error second occurs.
			Off	No error second.
ETH	LINK	Green	On	Data transmit in Ethernet.
			Off	No data transmit in Ethernet.
	100M	Green	On	Data receive in 100M.
			Off	No data receive in 100M.
	COL	Red	Blink	Error collision occurs.
			Off	No error collision.
MODE	E1	Green	Blink	E1 Data tramsmit and receive
			On	E1 cable cable connected
		Red	On	No E1 cable connected
	SER	Green	Blink	Serial Data tramsmit and receive
			On	DTE Connected
		Red	On	DTE Disconnect
	ETH	Green	Blink	Ethernet Data tramsmit and receive
			On	Ethernet cable connected
		Red	On	No Ethernet cable connected

2.2 Rear Panel

2.2.1. E1/T1 Interface Model

AC power input version

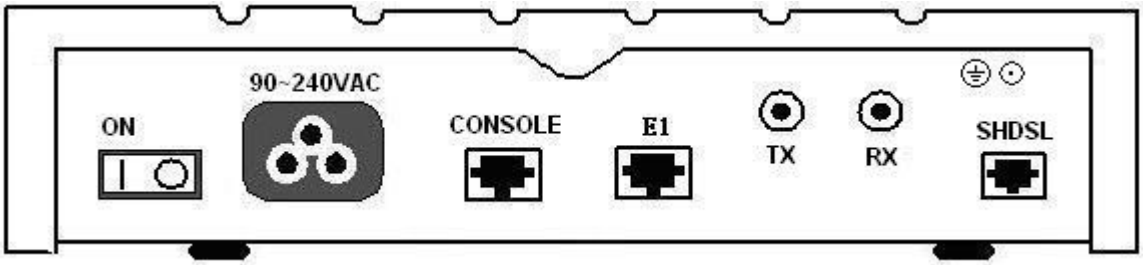

The rear panel of this model is including power switch, AC power socket, RJ-45 console, G.703 RJ-48C jack or BNC jack for transmitting and receiving and RJ-45 for DSL cable from left to right.

DC power input version

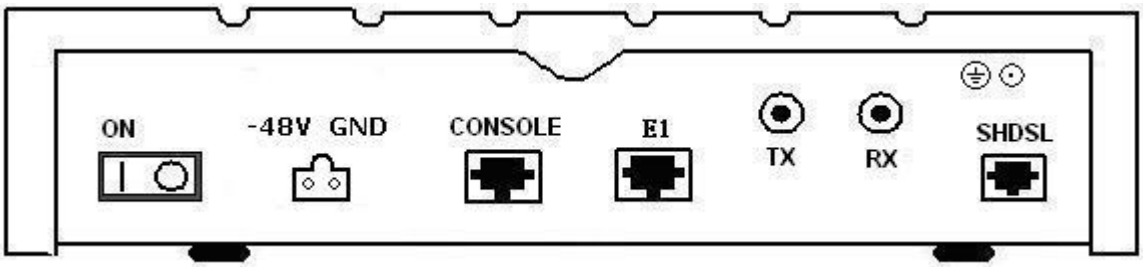

The rear panel of this model is including power switch, DC power socket, RJ-45 console, G.703 RJ-48C jack or BNC jack for transmitting and receiving and RJ-45 for DSL cable from left to right.

AC & DC dual power input version

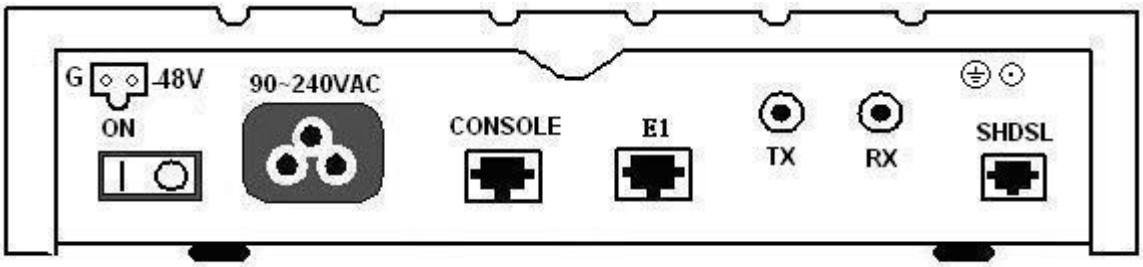

The rear panel of this model is including DC power socket, AC power switch, AC power socket, RJ-45 console, G.703 RJ-48C jack or BNC jack for transmitting and receiving and RJ-45 for DSL cable from left to right.

Connector Description	
ON	Power switch. Press 1 for turn on and press 0 for off
90~240V AC	IEC-320 C6 AC input connector. It has power adapting function from 90V to 240V
-48V GND	DC power input connector (-48V)
CONSOLE	RJ-45 for system configuration and maintenance
G.703	RJ-48C for 120Ω E1/T1 connection with PABX (Private Automatic Branch Exchange) or E1 Router
TX	BNC for 75Ω E1 transmitting
RX	BNC for 75Ω E1 receiving
SHDSL	RJ-45 for DSL connection

2.2.2. Serial Interface Model

AC power input version

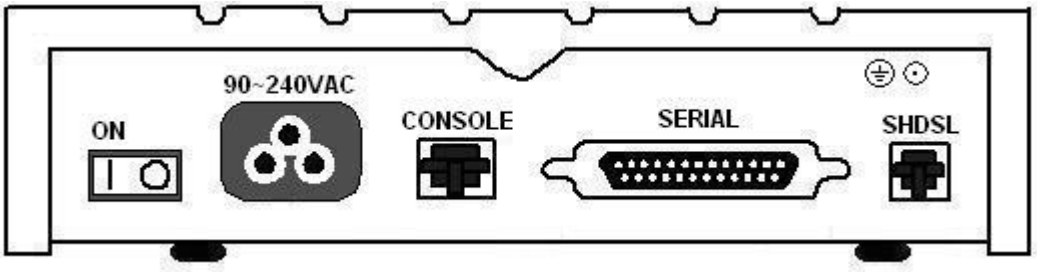

The rear panel of this model is including power switch, AC power socket, RJ-45 for console cable, DB-25(Female) for serial cable and RJ-45 for DSL cable from left to right.

DC power input version

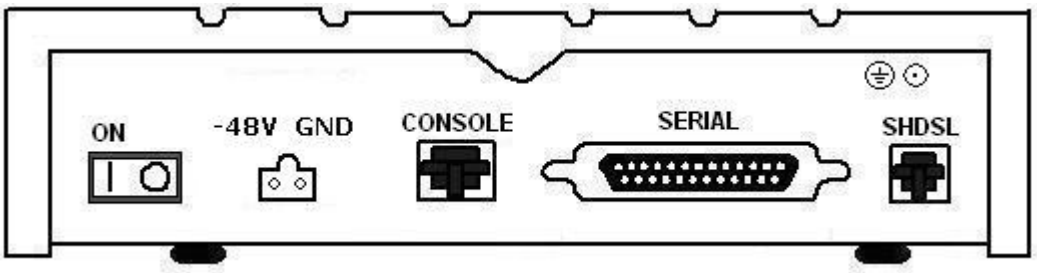

The rear panel of this model is including power switch, DC power socket, RJ-45 for console cable, DB-25(Female) for serial cable and RJ-45 for DSL cable from left to right.

AC & DC dual power input version

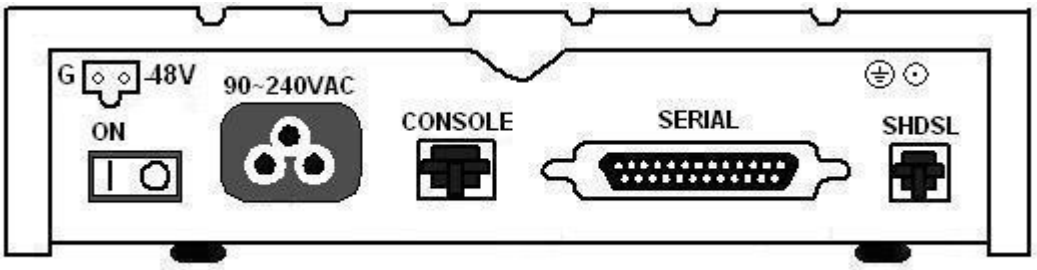

The rear panel of this model is including DC power socket, AC power switch, AC power socket, RJ-45 for console cable, DB-25(Female) for serial cable and RJ-45 for DSL cable from left to right.

Connector Description	
ON	Power switch. Press 1 for turn on and press 0 for off.
90~240V AC	IEC-320 C6 AC input connector. It has power adapting function from 90V to 240V
-48V GND	DC power input connector (-48V)
CONSOLE	RJ-45 for system configuration and maintenance
SERIAL	DB-25(F) for RS-530 and V.35 or X.21(with adaptor cable)
SHDSL	RJ-45 for DSL Connection

2.2.3. Ethernet Interface Model

AC power input version

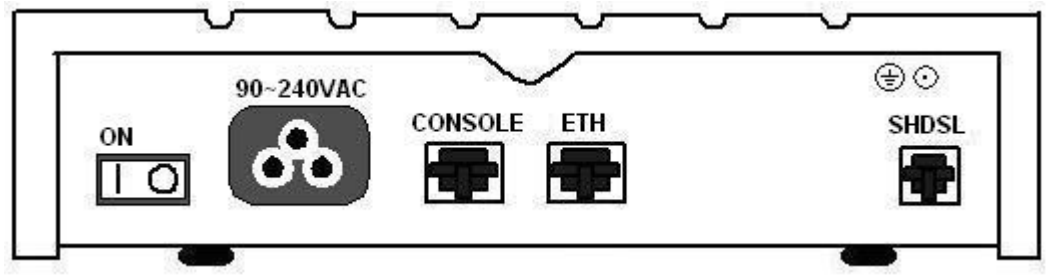

The rear panel of this model is including power switch, AC power socket, RJ-45 for console cable, LAN for Ethernet cable and RJ-45 for DSL cable from left to right.

DC power input version

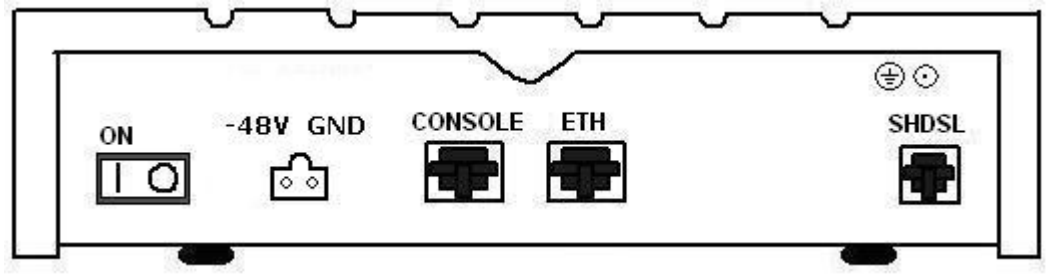

The rear panel of this model is including power switch, DC power socket, RJ-45 for console cable, LAN for Ethernet cable and RJ-45 for DSL cable from left to right.

AC & DC dual power input version

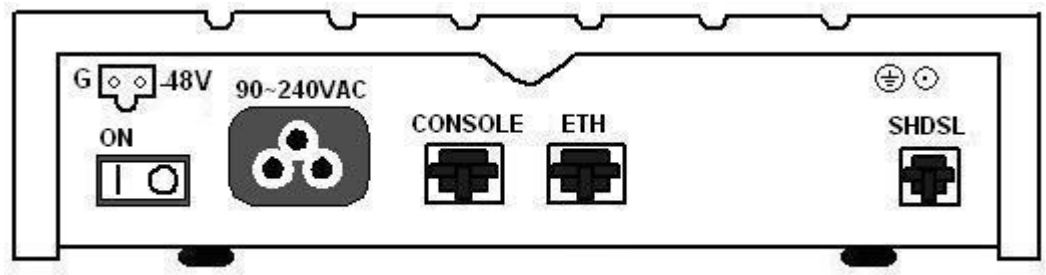

The rear panel of this model is including DC power socket, AC power switch, AC power socket, RJ-45 for console cable, LAN for Ethernet cable and RJ-45 for DSL cable from left to right.

Connector Description	
ON	Power switch. Press 1 for turn on and press 0 for turn off.
90~240V AC	IEC-320 C6 AC input connector. It has power adapting function from 90V to 240V.
-48V GND	DC power input connector (-48V)
CONSOLE	RJ-45 for system configuration and maintenance.
ETH	RJ-45 LAN port for Ethernet cable
SHDSL	RJ-45 for DSL Connection

2.2.4. Multi-interfaces in one Model

DC power input version

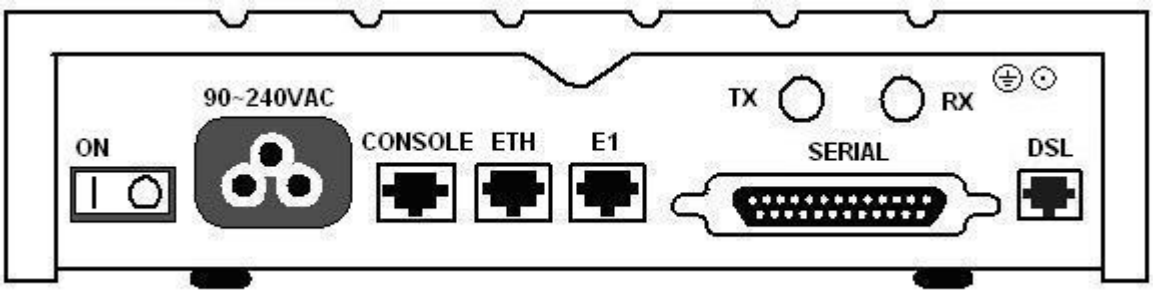

The rear panel of this model is including power switch, AC power socket, RJ-45 for console cable, LAN for Ethernet cable, G.703 RJ-48C or BNC jacks for transmitting and receiving, DB-25(Female) for serial cable and RJ-45 for DSL cable from left to right.

DC power input version

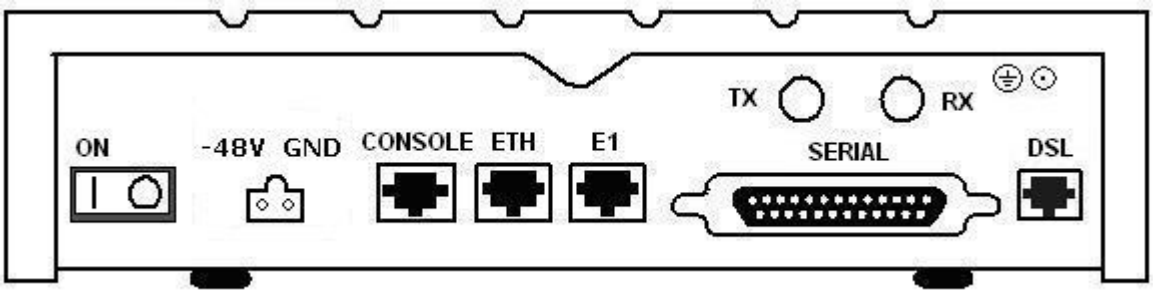

The rear panel of this model is including power switch, DC power socket, RJ-45 for console cable, LAN for Ethernet cable, G.703 RJ-48C or BNC jacks for transmitting and receiving, DB-25(Female) for serial cable and RJ-45 for DSL cable from left to right.

AC & DC dual power input version

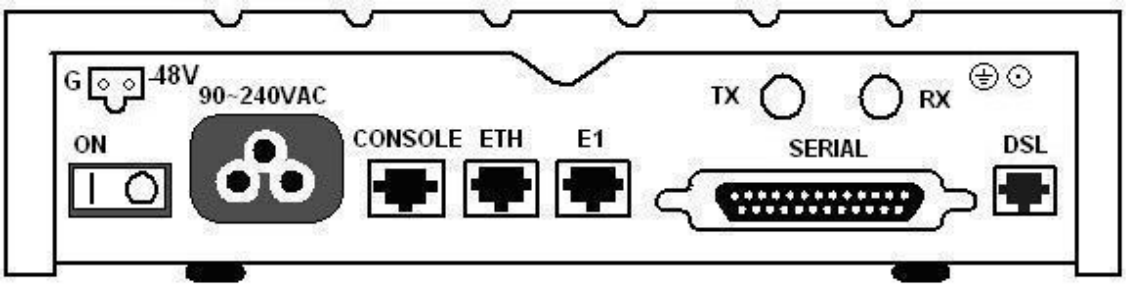

The rear panel of this model is including DC power socket, AC power switch, AC power socket, RJ-45 for console cable, LAN for Ethernet cable, G.703 RJ-48C or BNC jacks for transmitting and receiving, DB-25(Female) for serial cable and RJ-45 for DSL cable from left to right.

Connector Description	
ON	Power switch. Press 1 for turn on and press 0 for off
90~240V AC	IEC-320 C6 AC input connector. It has power adapting function from 90V to 240V
-48V GND	DC power input connector (-48V)
CONSOLE	RJ-45 for system configuration and maintenance
ETH	RJ-45 LAN port for Ethernet cable
E1	RJ-48C for 120Ω E1/T1 connection with PABX (Private Automatic Branch Exchange) or E1 Router
SERIAL	DB-25(F) for RS-530 and V.35 or X.21(with adaptor cable)
TX	BNC for 75Ω E1 transmitting
RX	BNC for 75Ω E1 receiving
DSL	RJ-45 for DSL connection

2.3 Installation

Note: To avoid possible damage to this NTU, do not turn on the product before hardware installation.

(a) Plug the power cord in the power socket.

(b) Plug the console port in console if you want to configure the NTU with VT100 program of NB or PC.

(c) Plug the E1/T1 cable (75Ω BNC cables for E1 or 120Ω cable for E1 or T1)

or/and SERIAL cable

or/and Ethernet cable

(d) Plug SHDSL cable

(e) Power on

2.3.1. E1/T1 Interface

AC power input version

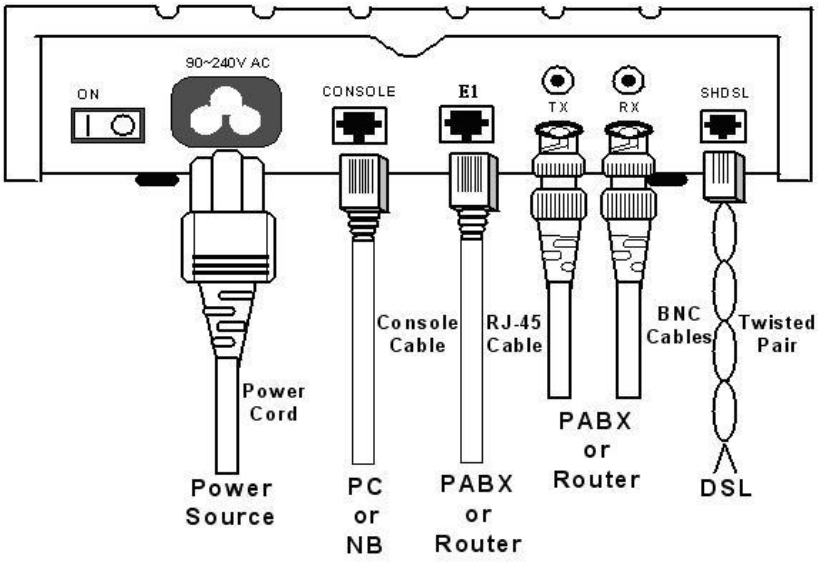

DC power input version

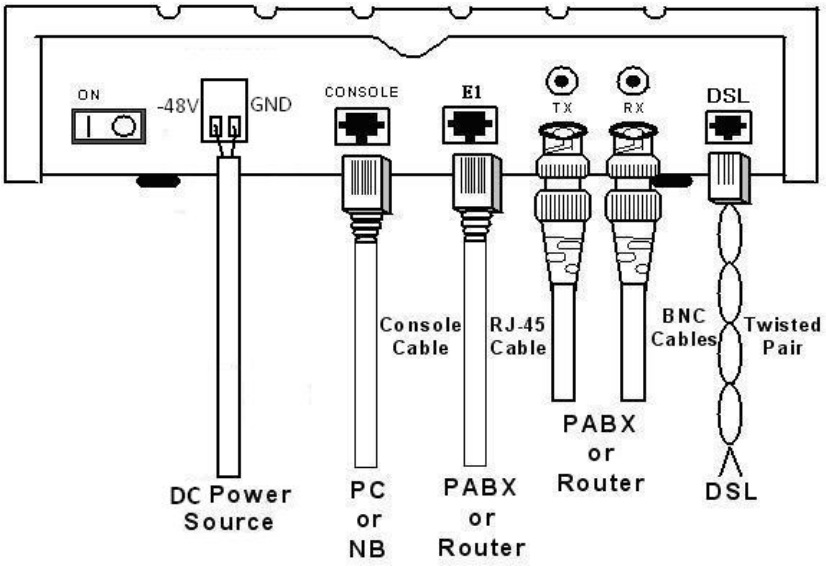

AC & DC dual power input version

(Use DC input only)

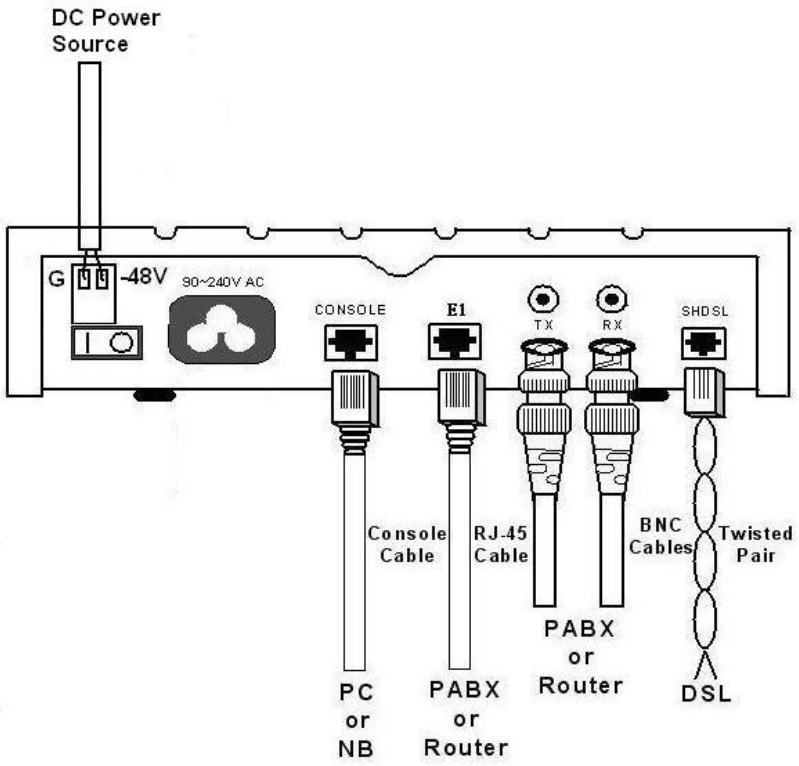

2.3.2. Serial Interface

AC power input version

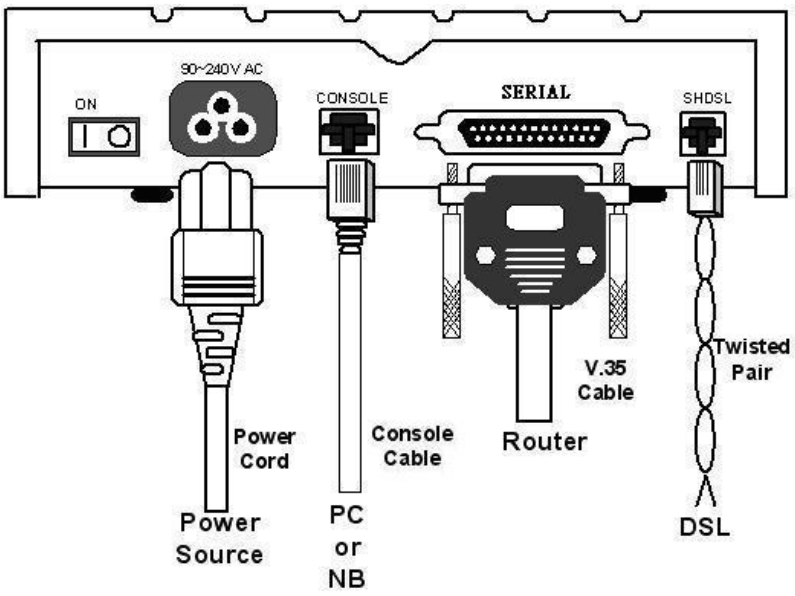

DC power input version

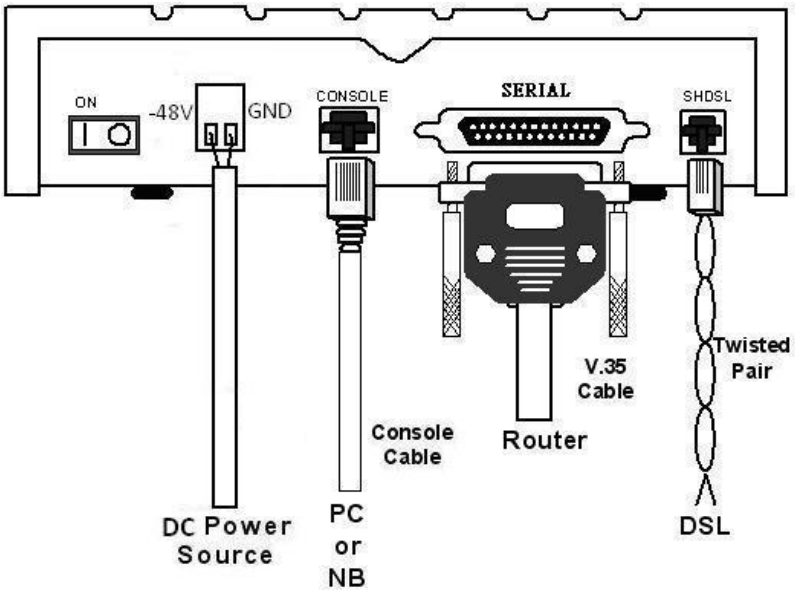

AC & DC dual power input version

(Use DC input only)

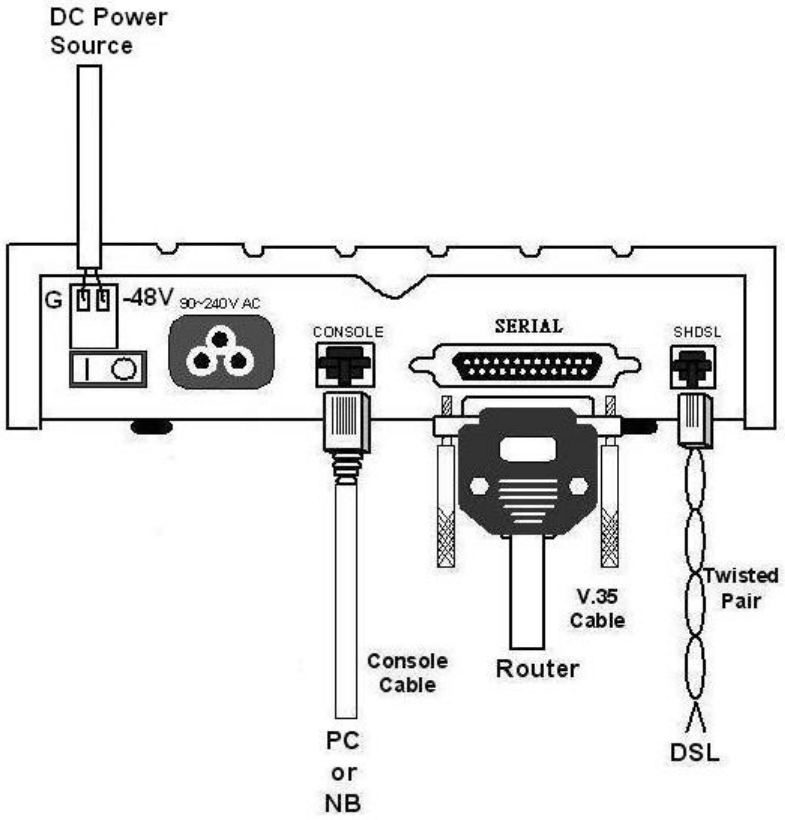

2.3.3. Ethernet Interface

AC power input version

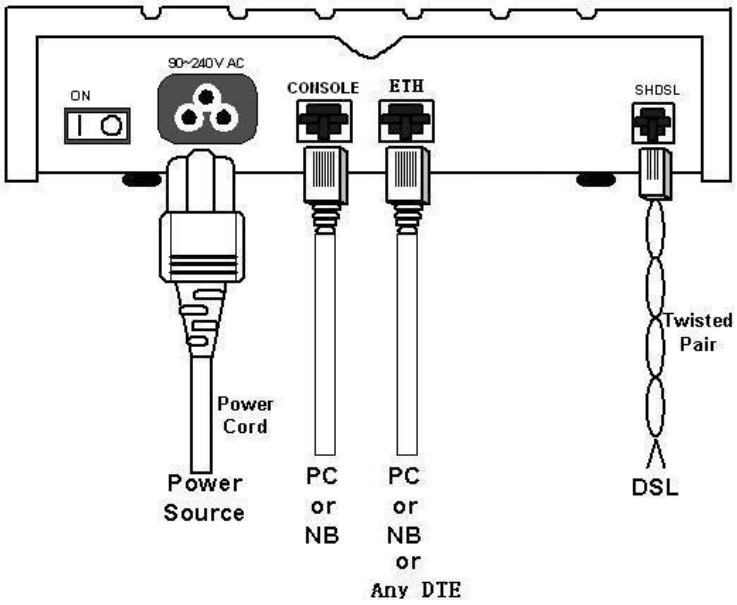

DC power input version

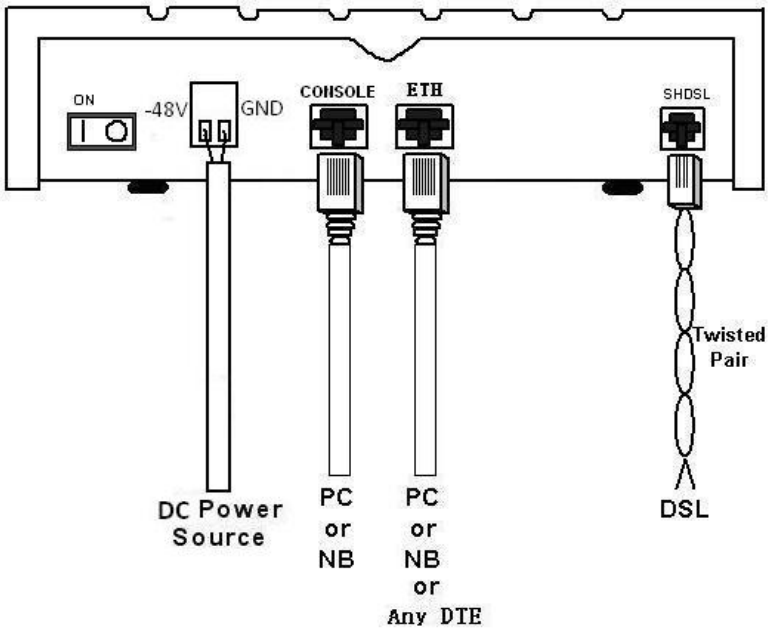

AC & DC dual power input version

(Use DC input only)

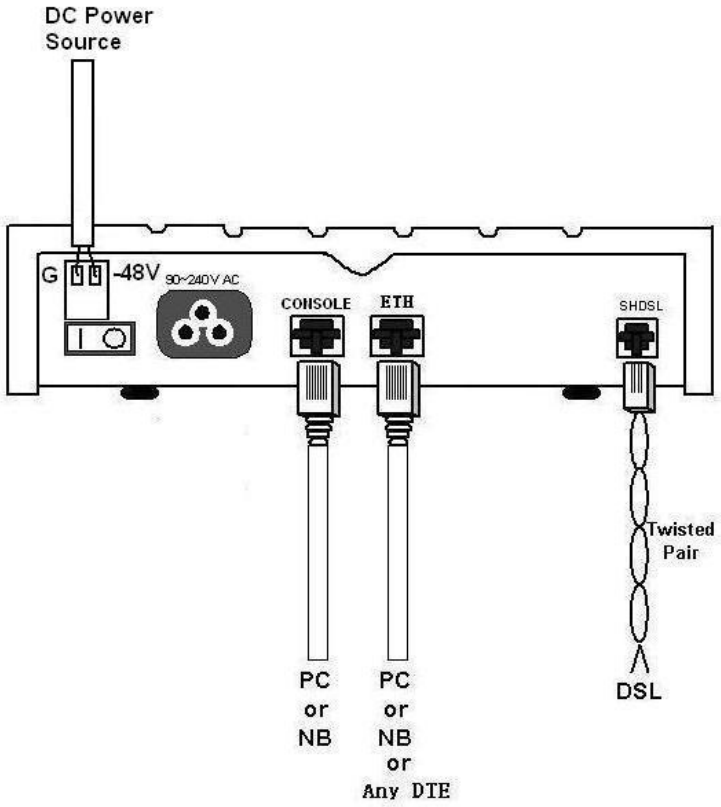

Protective earth:

The marked lug or terminal should be connected to the building protective earth bus.

The function of protective earth does not serve the purpose of providing protection against electrical shock, but instead enhances surge suppression on the DSL lines for installations where suitable bonding facilities exist.

We strongly recommend to grounding this device for lightning protection purpose.

The connector type is M3 machine screw.

Warning! High voltage. Do not open the housing

3. Configuration with Keypad and LCD

This chapter provides information about the configuration of your UM-SNB NTU via front panel LCD display and keypads.

3.1 Keypad

The UM-SNB is designed to provide an user-friendly configuration and management by using keypad and LCD display on the front panel without a computer with the VT100 terminal software connected.

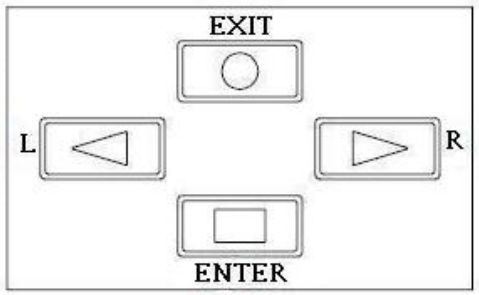

Key Pad		Description
Exit/-	●	Return to previous configuration menu.
Enter/+	■	Skip to next configuration menu or configure this item.
L	◀	Select other parameter in the same level menu.
R	▶	Select other parameter in the same level menu.

3.2 Main menu Tree

Model vs. Interface modes support (table 1):

Model	Interface modes support
UM-SNB/E1 , UM-SNB/E1/4w E1 interface model	E1 interface
UM-SNB/703 , UM-SNB/703/4w E1 + T1 interface model	E1 interface
	T1 interface
UM-SNB/35 , UM-SNB/35/4w Serial interface model	Serial interface (V.35 , X.21)
UM-SNB/L , UM-SNB/L/4w Ethernet interface model	Ethernet interface
UM-SNB/3in1 , UM-SNB/3in1/4w E1+Serial+Ethernet interface model	E1 interface
	Serial interface (V.35 , X.21)
	Ethernet interface
	E1+Serial(V.35 , X.21) interface
	E1+Ethernet interface
UM-SNB/4in1 , UM-SNB/4in1/4w E1+T1+ Serial +Ethernet interface model	E1 interface
	T1 interface
	Serial interface (V.35 , X.21)
	Ethernet interface
	E1+Serial (V.35 , X.21) interface
	E1+Ethernet interface
	T1 + Serial (V.35 , X.21) interface
	T1 + Ethernet interface

Model vs. Interface modes support (table 2):

Model \ Interface		E1	T1	Serial	Ethernet	E1+Serial	E1+Ethernet	T1+Serial	T1+Ethernet
2-wire	4-wire								
UM-SNB/E1	**UM-SNB/E1/4w**	•							
UM-SNB/703	**UM-SNB/703/4w**	•	•						
UM-SNB/35	**UM-SNB/35/4w**			•					
UM-SNB/L	**UM-SNB/L/4w**				•				
UM-SNB/3in1	**UM-SNB/3in1/4w**	•		•	•	•	•		
UM-SNB/4in1	**UM-SNB/4in1/4w**	•	•	•	•	•	•	•	•

After turning on device, the LCD display will prompt **G.SHDSL .BIS NTU.** Press ***Enter*** to enter. There will display some sub-menus as following:

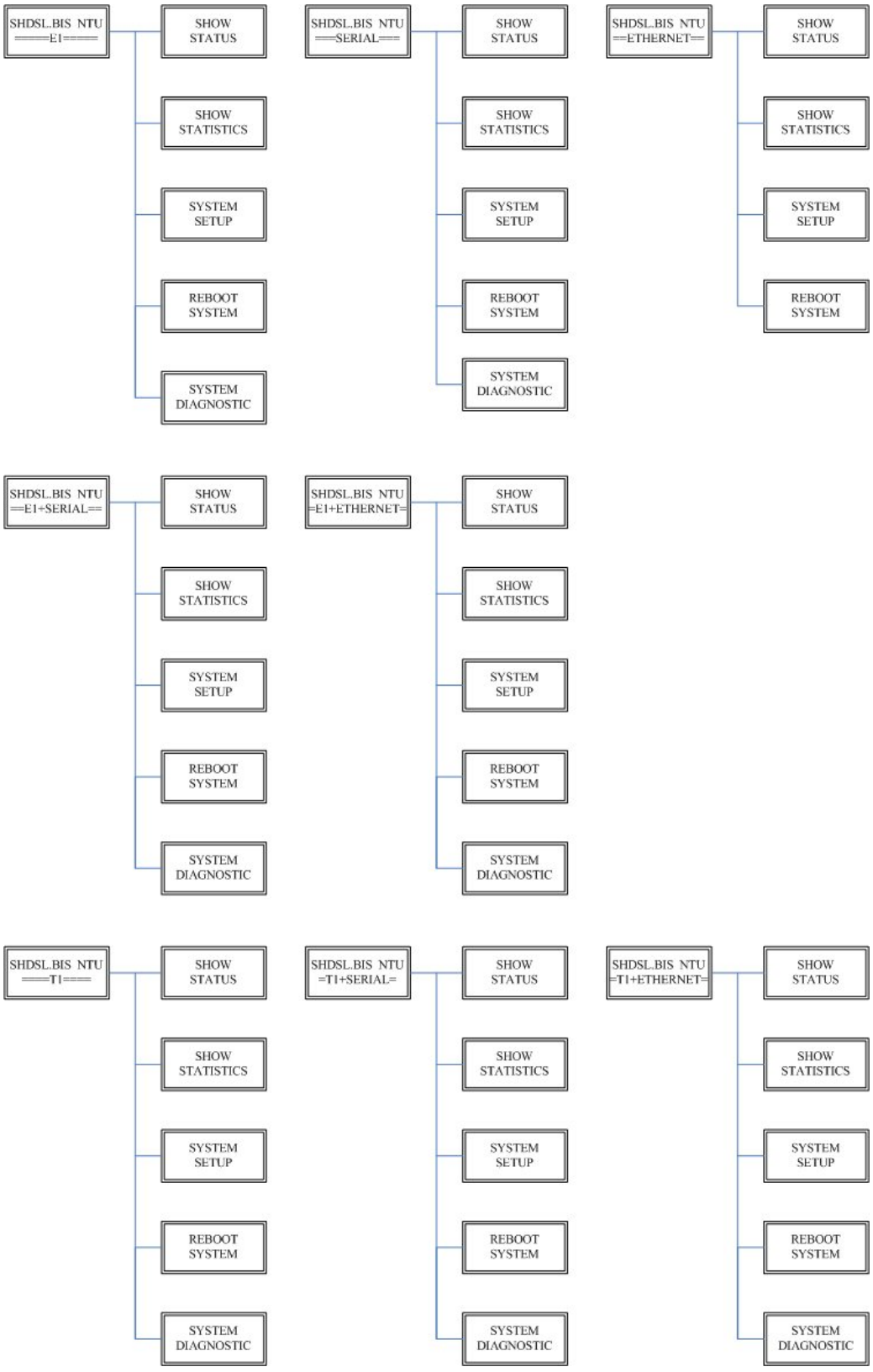

Please notice that the Ethernet interface mode has not SYSTEM DIAGNOSTIC.

For more detail on these sub-menus, please refer to each chapter.

3.3 Menu tree for SHOW STATUS

You can check the status via LCD display.

The SHOW STATUS menu tree is as following.

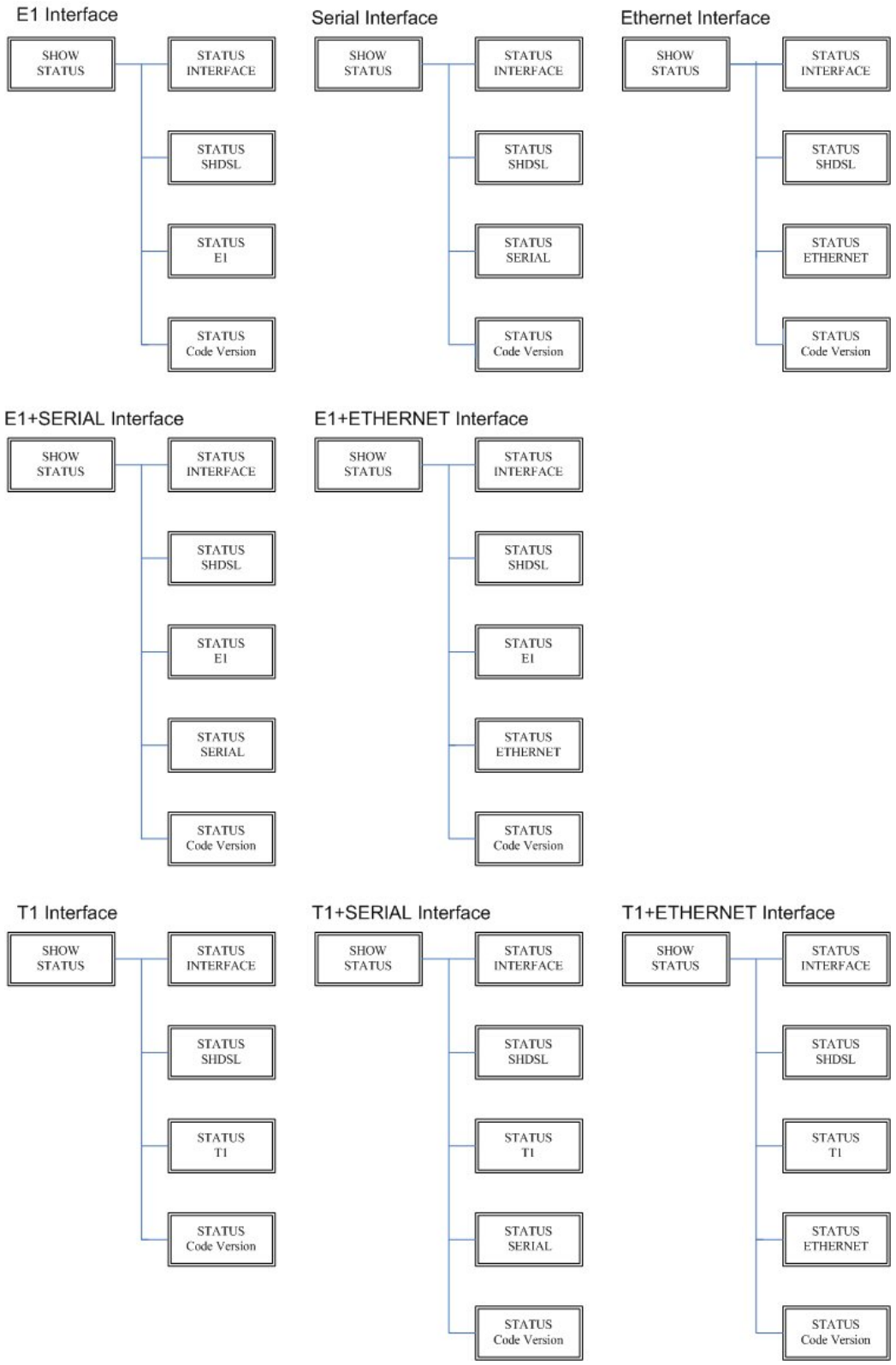

For more detail on these sub-menus, please refer to following:

SHOW STATUS > STATUS SHDSL

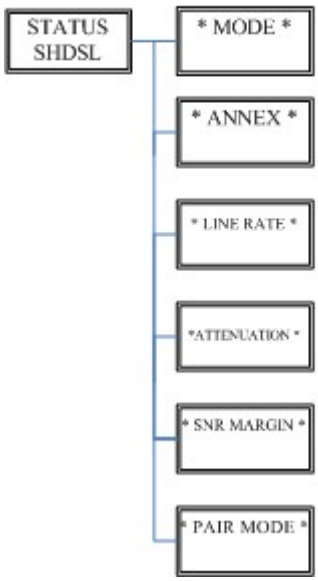

SHOW STATUS > STATUS E1

SHOW STATUS > STATUS SERIAL

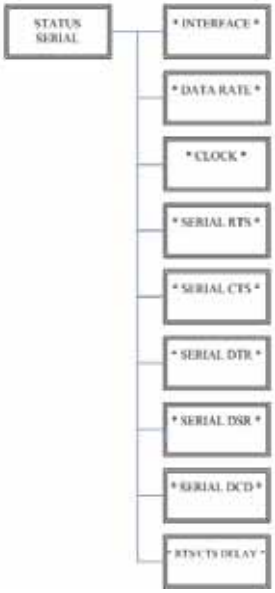

SHOW STATUS > STATUS ETHERNET

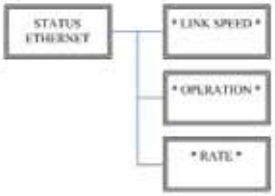

SHOW STATUS > STATUS T1

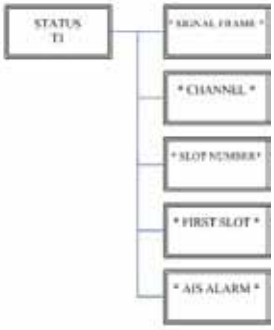

3.4 Menu tree for SHOW STATISTICS

The product can display two kinds of statistics data:

(a) Current 15 minutes period and 96 previous 15-minutes periods of SHDSL performance.

(b) Current 24 hour period and 7 previous 24-hours periods of SHDSL performance.

SHDSL's statistics data:

SHDSL
ES
SES
UAS
LOSW

If using the E1 interface mode, it can also show the E1 performance data.

(c) Current 15 minutes period and 96 previous 15-minutes periods of E1 performance.

(d) Current 24 hours period and 7 previous 24-hours periods of E1 performance.

E1's statistics data:

E1
ES
SES
UAS

Abbrev of statistics terms:

ES	Error Second
SES	Severely Error Second
UAS	Unavailable Second
LOWS	Loss of Synchronization word

Model vs. Interface modes and statistics support:

Model	Interface modes support	SHDSL statistics support **ES ,SES,UAS,LOSW**	E1 statistics support **ES,SES,UAS**
UM-SNB/E1 , UM-SNB/E1/4w E1 interface model	E1 interface	•	•
UM-SNB/703 , UM-SNB/703/4w E1 + T1 interface model	E1 interface	•	•
	T1 interface	•	
UM-SNB/35 , UM-SNB/35/4w Serial interface model	Serial interface (V.35 , X.21)	•	
UM-SNB/L , UM-SNB/L/4w Ethernet interface model	Ethernet interface	•	
UM-SNB/3in1 , UM-SNB/3in1/4w E1+Serial+Ethernet interface model	E1 interface	•	•
	Serial interface (V.35 , X.21)	•	
	Ethernet interface	•	
	E1+Serial(V.35 , X.21) interface	•	•
	E1+Ethernet interface	•	•
UM-SNB/4in1 , UM-SNB/4in1/4w E1+T1+ Serial +Ethernet interface model	E1 interface	•	•
	T1 interface	•	
	Serial interface (V.35 , X.21)	•	
	Ethernet interface	•	
	E1+Serial (V.35 , X.21) interface	•	•
	E1+Ethernet interface	•	•
	T1 + Serial (V.35 , X.21) interface	•	
	T1 + Ethernet interface	•	

3.4.1. Show Statistic on E1 Interface

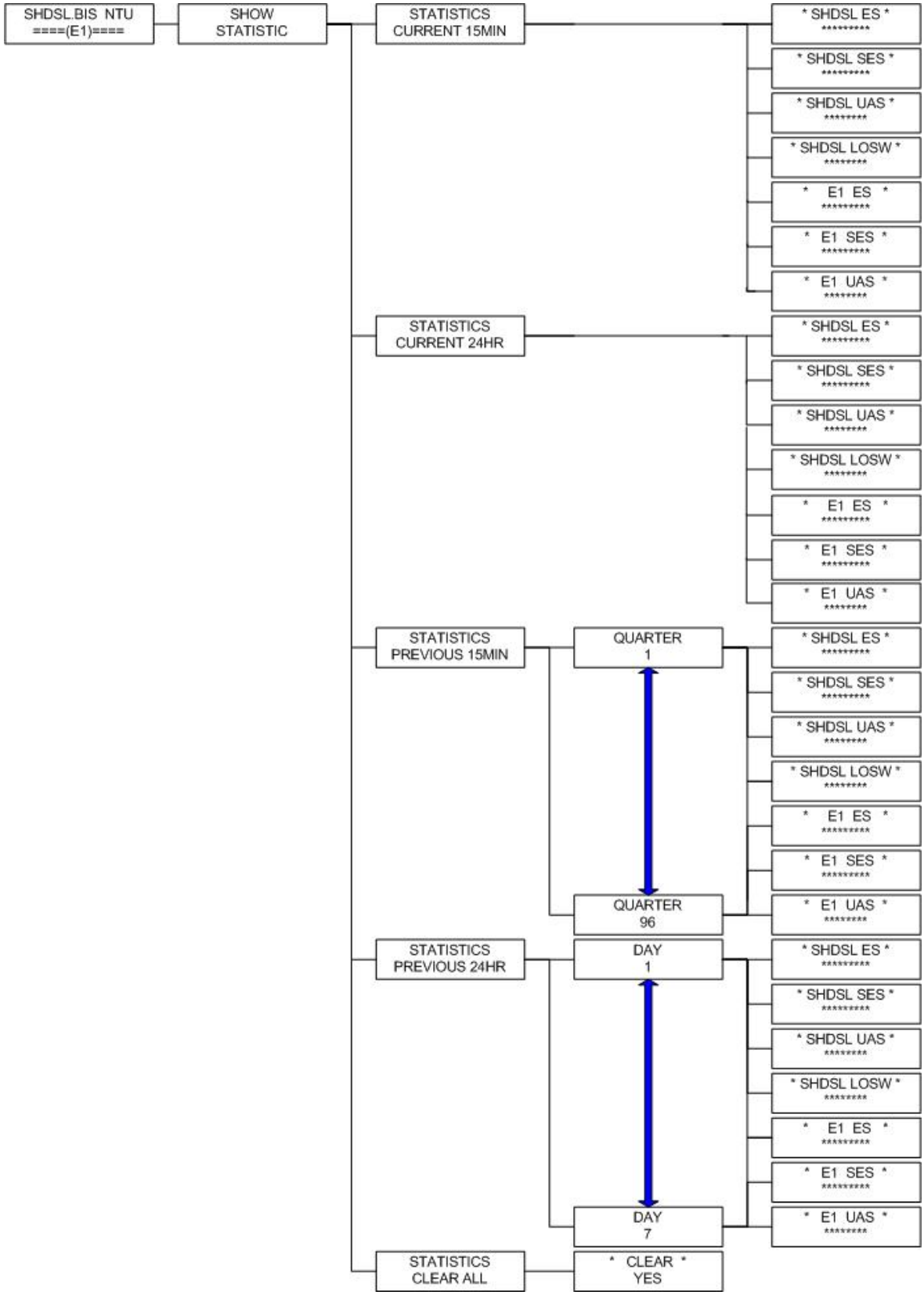

3.4.2. Show Statistic on Serial/Ethernet/T1 Interface

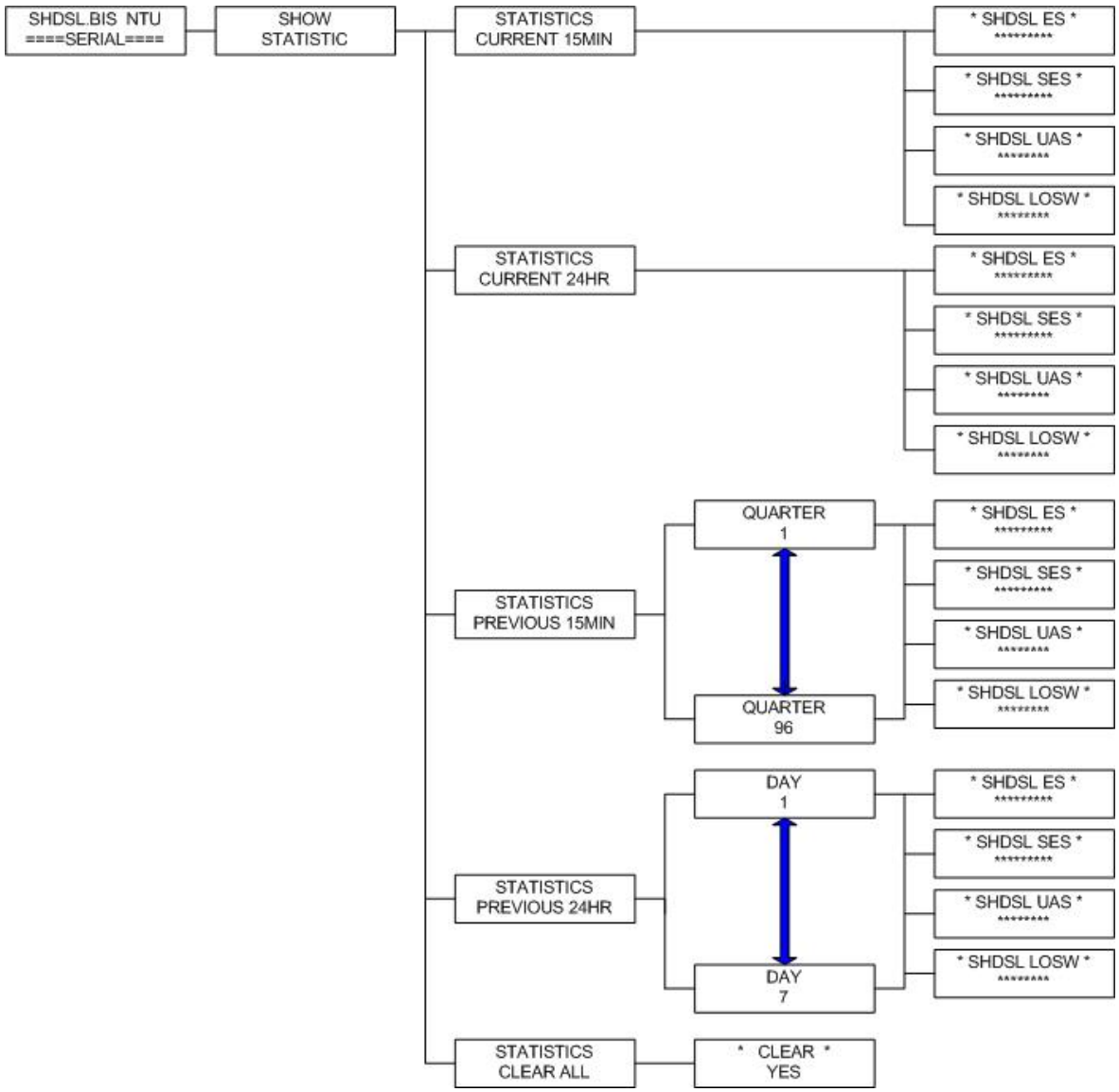

3.5 Menu tree for SYSTEM SETUP

You can setup five interface modes via LCD display.

E1 Interface Mode

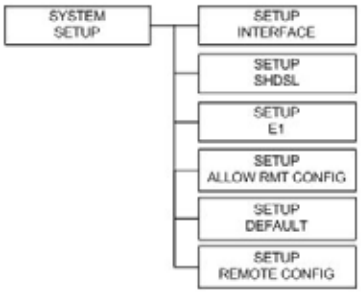

Serial Interface Mode

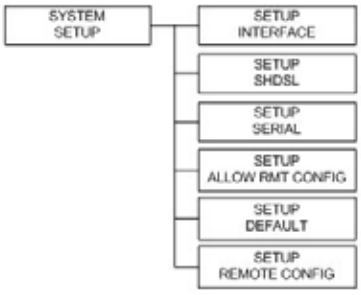

Ethernet Interface Mode

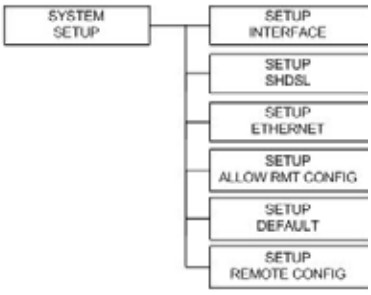

E1 + Series Interface Mode

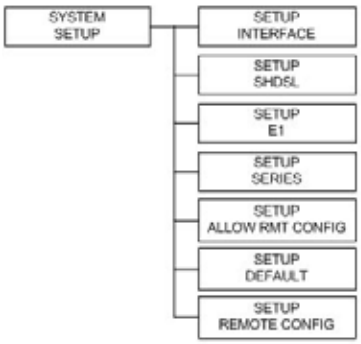

E1 + Ethernet Interface Mode

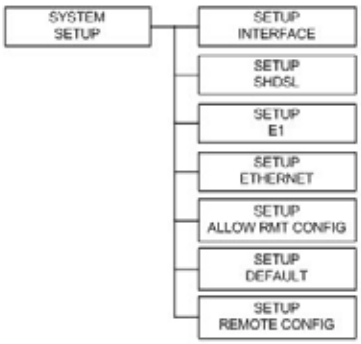

T1 Interface Mode

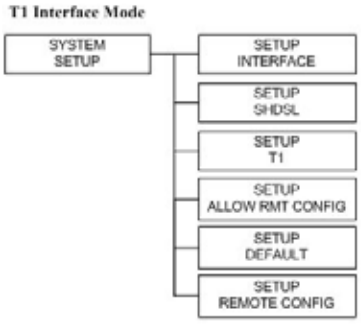

T1 + Series Interface Mode

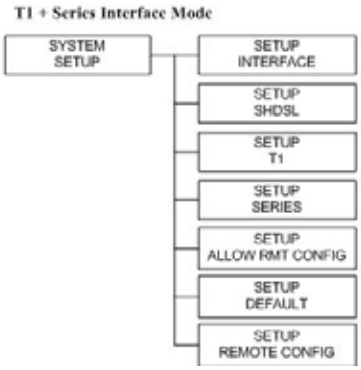

T1 + Ethernet Interface Mode

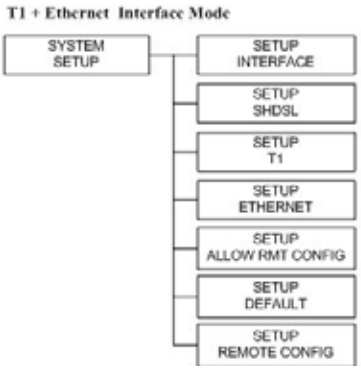

3.5.1. Sub-Menu tree for SETUP SHDSL

SYSTEM SETUP > SETUP SHDSL

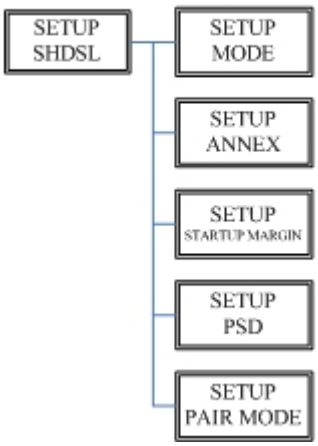

SETUP SHDSL	*Selection items*
SETUP MODE	STU-R, STU-C-INTCLK, STU-C-EXTCLK
SETUP ANNEX	A, B, F, G
SETUP STARTUP MARGIN	-10 to 21
SETUP PSD	SYM, ASYM
SETUP PAIR MODE	1 Pair, 2 Pair

The following are commonly used acronyms for SETUP MODE:

STU-R	RT side, where the clock source is set to external
STU-C-INTCLK	CO side, where the clock source is set to internal
STU-C-EXTCLK	CO side, where the clock source is set to external

3.5.2. Sub-Menu tree for SETUP E1 Interface

SYSTEM SETUP ➔ SETUP E1

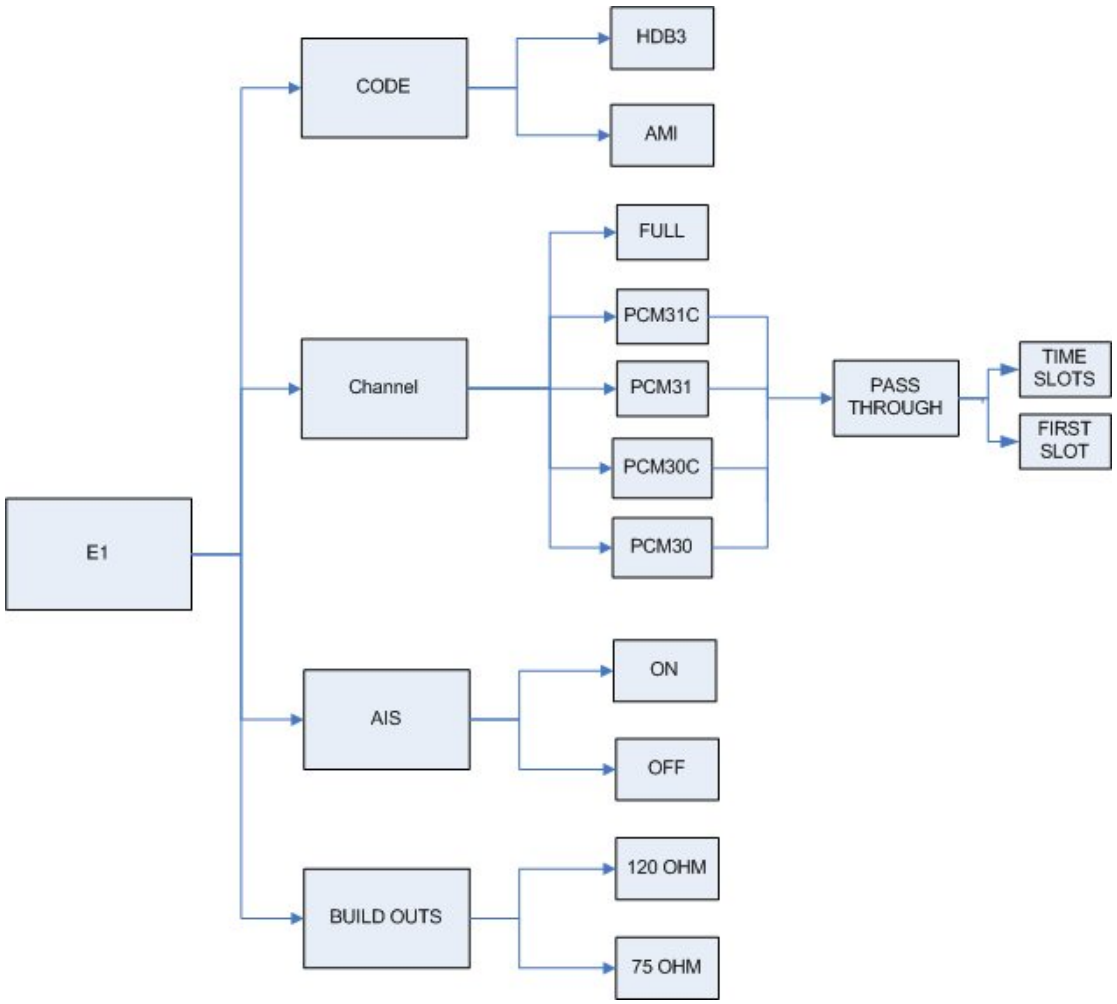

E1 parameter setting:

E1 Items	Setting
Channel	PCM31 PCM31C PCM30 PCM30C FULL
Pass Through	Off On
Code	HDB3 AMI
AIS	On Off
Build Outs	120 ohms 75 ohms

Framer Setting:

Framer		Slot Number	First Slot
PCM31	FAS	1 to 31	1 to 31
PCM31C	FAS+CRC4	1 to 31	1 to 31
PCM30	FAS+CAS	1 to 30	1 to 31 (can't use 16)
PCM30C	FAS+CAS+CRC4	1 to 30	1 to 31 (can't use 16)
FULL	UNFRAMED		

The table of number of time slot vs. 1st time slot:

Annex A/B/F/G 2-wire

Channel	Number of slot	1st slot
FULL (UNFRAMED)	-----	-----
PCM31 PCM31C	31	1
	30	1~2
	29	1~3
	28	1~4
	27	1~5
	26	1~6
	25	1~7
	24	1~8
	23	1~9
	22	1~10
	21	1~11
	20	1~12
	19	1~13
	18	1~14
	17	1~15
	16	1~16
	15	1~17
	14	1~18
	13	1~19
	12	1~20
	11	1~21
	10	1~22
	9	1~23
	8	1~24
	7	1~25
	6	1~26
	5	1~27
	4	1~28
	3	1~29
	2	1~30
	1	1~31
PCM30 PCM30C	30	1
	29	1~2
	28	1~3

	27	1~4
	26	1~5
	25	1~6
	24	1~7
	23	1~8
	22	1~9
	21	1~10
	20	1~11
	19	1~12
	18	1~13
	17	1~14
	16	1~15
	15	1~15,17
	14	1~15,17~18
	13	1~15,17~19
	12	1~15,17~20
	11	1~15,17~21
	10	1~15,17~22
	9	1~15,17~23
	8	1~15,17~24
	7	1~15,17~25
	6	1~15,17~26
	5	1~15,17~27
	4	1~15,17~28
	3	1~15,17~29
	2	1~15,17~30
	1	1~15,17~31

Annex A/B/F/G 4-wire

Channel	Number of slot	1st slot
FULL (UNFRAMED)	-----	-----
PCM31 PCM31C	30	1~2
	28	1~4
	26	1~6
	24	1~8
	22	1~10
	20	1~12
	18	1~14
	16	1~16
	14	1~18
	12	1~20
	10	1~22
	8	1~24
	6	1~26
	4	1~28
	2	1~30
PCM30 PCM30C	30	1
	28	1~3
	26	1~5
	24	1~7

	22	1~9
	20	1~11
	18	1~13
	16	1~15
	14	1~15,17~18
	12	1~15,17~20
	10	1~15,17~22
	8	1~15,17~24
	6	1~15,17~26
	4	1~15,17~28
	2	1~15,17~30

Note:

When SHDSL.bis using 2-pairs(4-wires), the time slot number can only use even number

When E1 framer is PCM31C and PCM30C and set pass through ON, no fractional function can be use.

3.5.3. Sub-Menu tree for SETUP SERIAL Interface

SYSTEM SETUP ➔ SETUP SERIAL

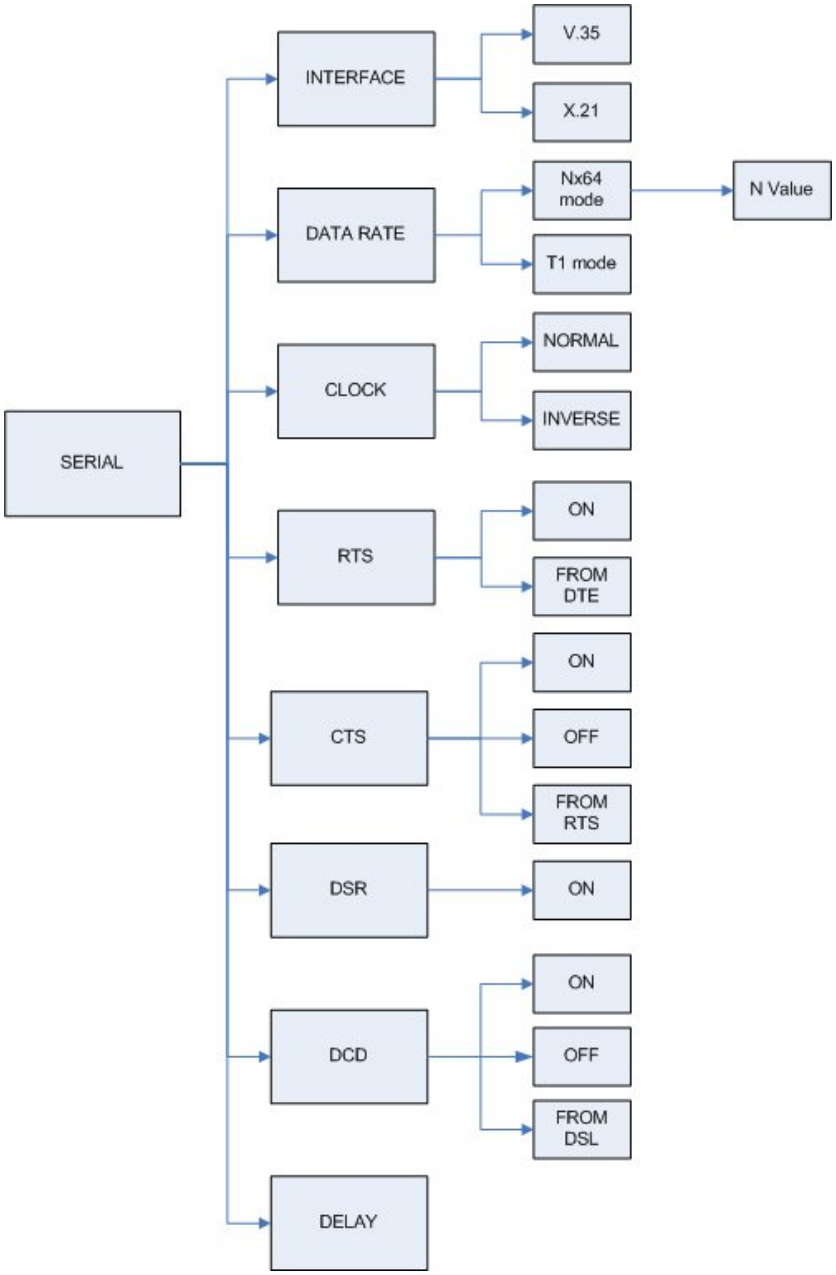

Serial interface control signals settings:

Serial Items	Setting			
INTERFACE	V.35 X.21(RS-530)			
Nx64K (Rate)	T1 mode			
	Nx64K mode	2-wires	Annex A/B	1 ~ 36
			Annex F/G	1 ~ 89
		4-wires	Annex A/B	2 ~ 72 (even number only)
			Annex F/G	2 ~ 128 (even number only)
CLOCK	Normal Inverse			
RTS	On From DTE			
CTS	On Off From RTS			
DSR	On Off From DTR			
DCD	On Off From DSL			
DELAY	0mS 1mS 2mS 3mS			

Note:

When SHDSL.bis using 2-pairs (4-wires), the Nx64K(Rate) number can only use even number

When other side as T1 interface and unframed mode connect to this side as Serial interface, we must set Serial rate type as T1 mode.

The handshake signal direction between DCE and DTE

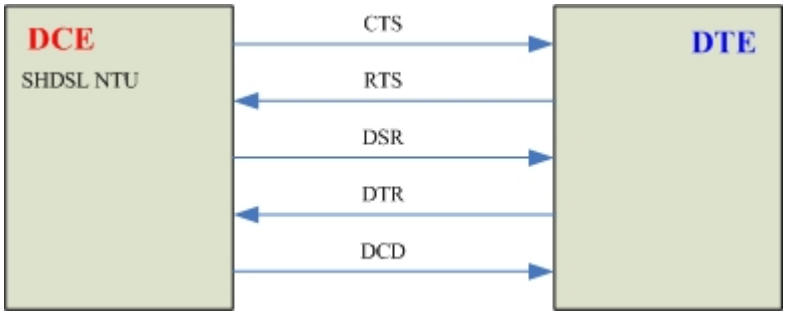

The below diagram shows CTS follow RTS, DSR follow DTR

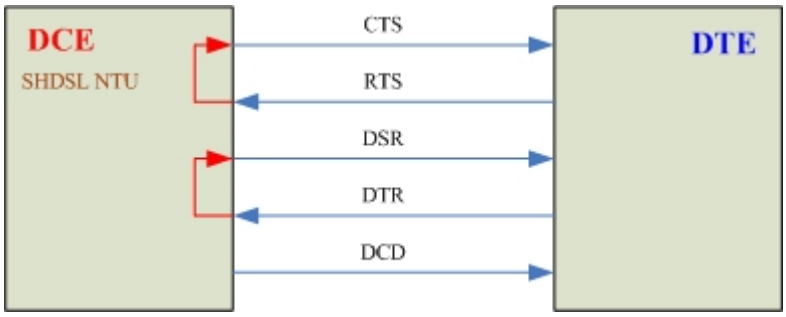

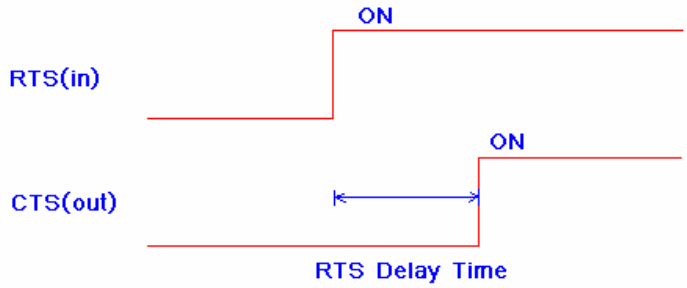

The RTS delay time is use to control CTS on delay to RTS signal, It works only for the setting:

CTS follow RTS and *RTS follow from DTE* .

3.5.4. Sub-menu tree for SETUP Ethernet Interface

SYSTEM SETUP ➔ SET UP ETHERNET

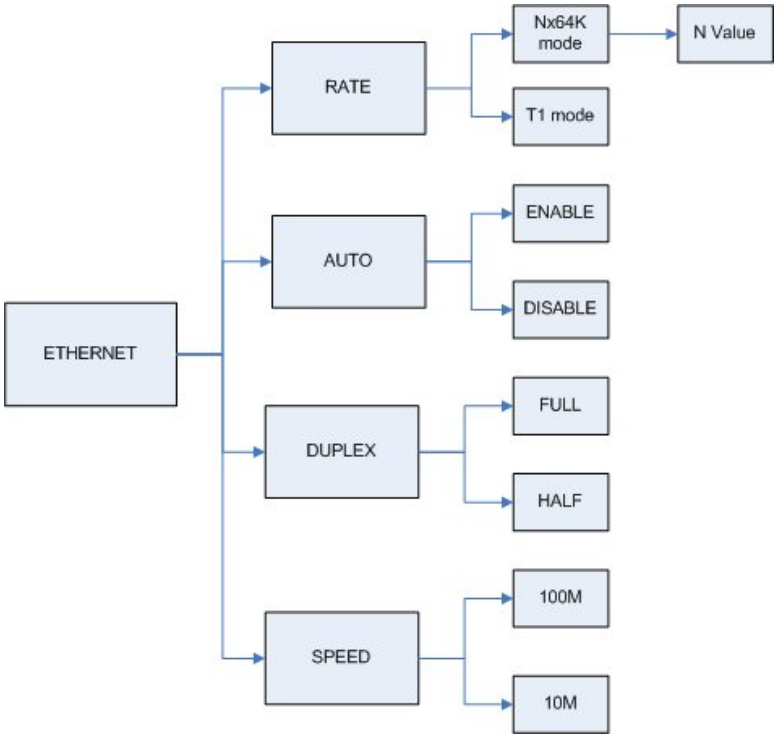

If you set Ethernet Auto Negotiation as **Enable**, the default setting on **Duplex** is **Full** and **Speed** is **100M**.

If you set Ethernet **Auto** Negotiation as Enable, the **Duplex** and **Speed** cannot be set up and it will use auto configuration.

Ethernet Items	Setting				
Rate	T1 mode				
	Nx64K mode		2-wires	Annex A/B	1 ~ 36
				Annex F/G	1 ~ 89
			4-wires	Annex A/B	2 ~ 72 (even number only)
				Annex F/G	2 ~ 178 (even number only)
Auto	Disable	Enable			
Duplex	Full-Duplex Half-Duplex	Auto Configuration			
Speed	100M 10M	Auto Configuration			

Note:

When SHDSL.bis using 2-pairs(4-wires), the Nx64(Rate) number can only use even number

When other side as T1 interface and unframed mode connect to this side as Ethernet interface, we must set Ethernet rate as T1 mode.

3.5.5. Sub-menu tree for SETUP T1 Interface

SYSTEM SETUP ➔ SETUP T1

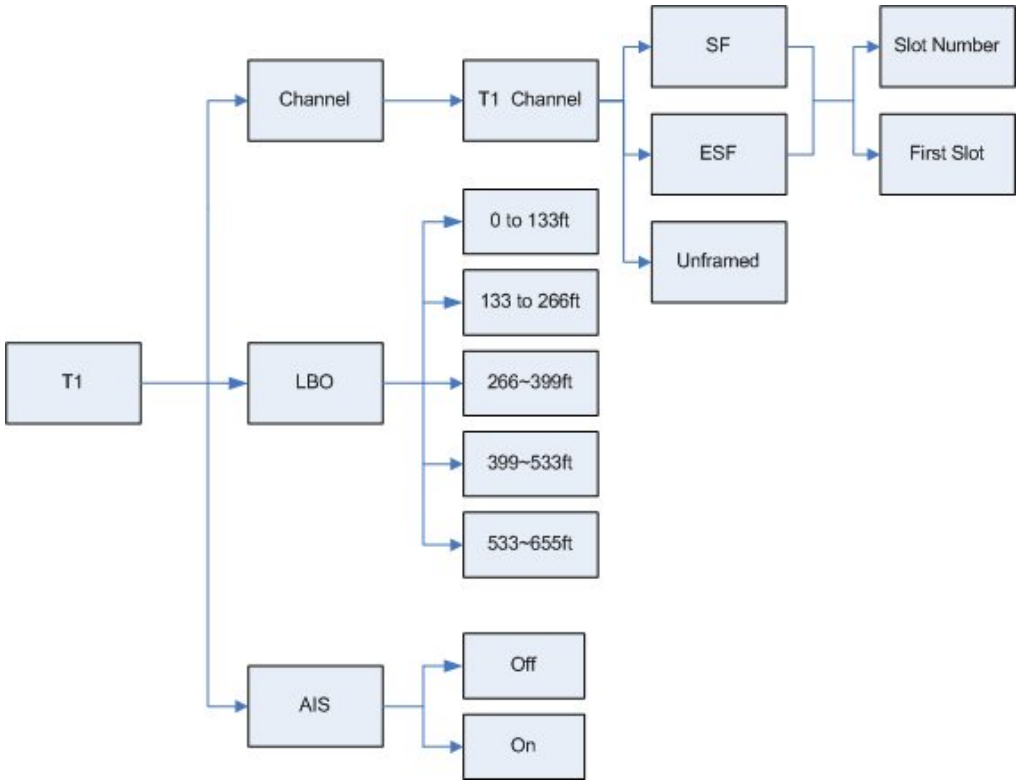

T1 parameter setting:

T1 Items	Setting
Channel	SF ESF Unframed
Slot Number	1~24
First Slot	1 to (25 -Slot Number)
LBO	0 ~133ft 133 ~ 266ft 266 ~399 ft 399 ft ~ 533ft 533ft ~ 655ft
AIS	Off On

The T1 interface can encode/decode its transmit/receive signals using Bipolar with Eight Zero Suppression (**B8ZS**) coding.

The table of number of time slot vs. 1st time slot:

Annex A/B/F/G 2-wire

Channel	Number of slot	1st slot
SF	24	1
ESF	23	1~2
	22	1~3
	21	1~4
	20	1~5
	19	1~6
	18	1~7
	17	1~8
	16	1~9
	15	1~10
	14	1~11
	13	1~12
	12	1~13
	11	1~14
	10	1~15
	9	1~16
	8	1~17
	7	1~18
	6	1~19
	5	1~20
	4	1~21
	3	1~22
	2	1~23
	1	1~24

Annex A/B/F/G 4-wire

Channel	Number of slot	1st slot
SF	24	1
ESF	22	1~3
	20	1~5
	18	1~7
	16	1~9
	14	1~11
	12	1~13
	10	1~15
	8	1~17
	6	1~19
	4	1~21
	2	1~23

Note:

When SHDSL.bis using 2-pairs(4-wires), the time slot number can only use even number

3.5.6. Application of STU-R configuration follow STU-C

Some configurations on STU-R side can follow STU-C side after DSL link up is finish.

Such that on STU-R side, you do not care about the settings of the E1 channel/slot number/first slot, serial data rate or Ethernet data rate. When the DSL link up is finished, these configurations will follow the STU-C side.

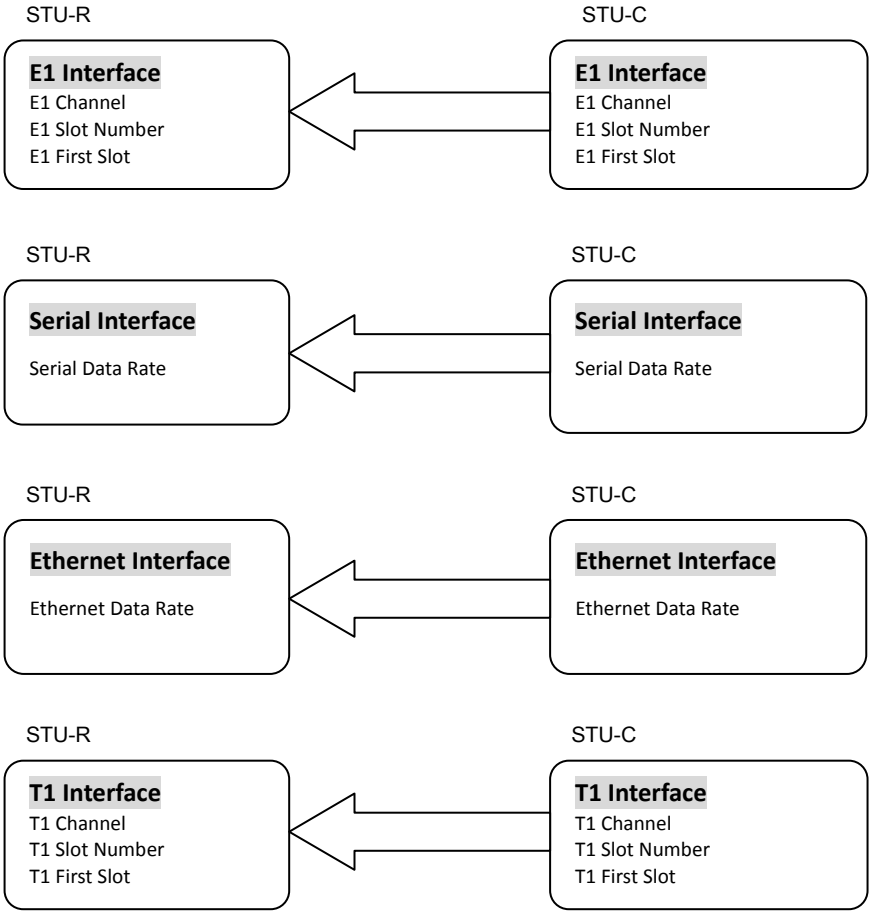

If STU-C is as T1 interface and set T1 channel is unframed mode, STU-R cannot follow.

When E1/T1 model time slot and Serial/Ethernet model date rate set 1 of 2 on STU-C side, STU-R cannot follow.

For the application on multi-interface, this function is not available. User must setup the configuration for both as the same time before DSL link.

3.5.7. Application of Multi-interface

Dual interface vs. Dual interface

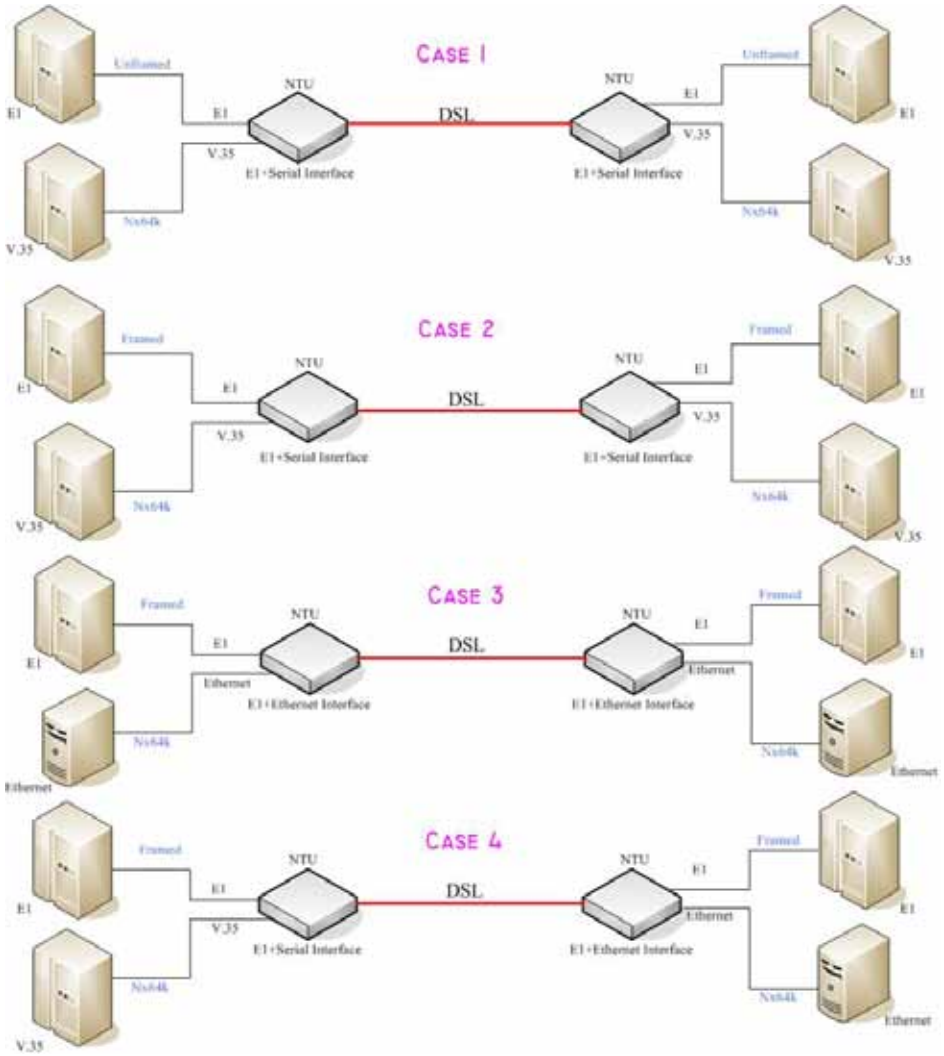

Case 1 E1(Unframed)+ Serial interface ←---------→ E1(Unframed)+ Serial interface

Case 2 E1(Framed)+ Serial interface ←---------→ E1(Framed)+ Serial interface

Case 3 E1(Framed)+ Ethernet interface ←---------→ E1(Framed)+ Ethernet interface

Case 4 E1(Framed)+ Serial interface ←---------→ E1(Framed)+ Ethernet interface

Table of **E1+ Serial interface** or **E1+Ethernet interface** mode on both sides

Annex A /B (2-wires)

E1 interface			Serial interface Ethernet interface
Channel	Number of slot	1st slot	Nx64K (Rate)
FULL (UNFRAMED)	-----	-----	1~4
PCM31 PCM31C	31	1	1~5
	30	1	1~6
	29	1	1~7
	28	1	1~8

	27	1	1~9
	26	1	1~10
	25	1	1~11
	24	1	1~12
	23	1	1~13
	22	1	1~14
	21	1	1~15
	20	1	1~16
	19	1	1~17
	18	1	1~18
	17	1	1~19
	16	1	1~20
	15	1	1~21
	14	1	1~22
	13	1	1~23
	12	1	1~24
	11	1	1~25
	10	1	1~26
	9	1	1~27
	8	1	1~28
	7	1	1~29
	6	1	1~30
	5	1	1~31
	4	1	1~32
	3	1	1~33
	2	1	1~34
	1	1	1~35
PCM30 PCM30C	30	1	1~6
	29	1	1~7
	28	1	1~8
	27	1	1~9
	26	1	1~10
	25	1	1~11
	24	1	1~12
	23	1	1~13
	22	1	1~14
	21	1	1~15
	20	1	1~16
	19	1	1~17
	18	1	1~18
	17	1	1~19
	16	1	1~20
	15	1	1~21
	14	1	1~22
	13	1	1~23
	12	1	1~24
	11	1	1~25
	10	1	1~26
	9	1	1~27
	8	1	1~28
	7	1	1~29
	6	1	1~30

	5	1	1~31
	4	1	1~32
	3	1	1~33
	2	1	1~34
	1	1	1~35

Annex F/G (2-wire)

E1 interface			Serial interface Ethernet interface
Channel	Number of slot	1st slot	Nx64K (Rate)
FULL (UNFRAMED)	-----	-----	1~57
PCM31 PCM31C	31	1	1~58
	30	1	1~59
	29	1	1~60
	28	1	1~61
	27	1	1~62
	26	1	1~63
	25	1	1~64
	24	1	1~65
	23	1	1~66
	22	1	1~67
	21	1	1~68
	20	1	1~69
	19	1	1~70
	18	1	1~71
	17	1	1~72
	16	1	1~73
	15	1	1~74
	14	1	1~75
	13	1	1~76
	12	1	1~77
	11	1	1~78
	10	1	1~79
	9	1	1~80
	8	1	1~81
	7	1	1~82
	6	1	1~83
	5	1	1~84
	4	1	1~85
	3	1	1~86
	2	1	1~87
	1	1	1~88
PCM30 PCM30C	30	1	1~59
	29	1	1~60
	28	1	1~61
	27	1	1~62
	26	1	1~63
	25	1	1~64
	24	1	1~65
	23	1	1~66
	22	1	1~67
	21	1	1~68

	20	1	1~69
	19	1	1~70
	18	1	1~71
	17	1	1~72
	16	1	1~73
	15	1	1~74
	14	1	1~75
	13	1	1~76
	12	1	1~77
	11	1	1~78
	10	1	1~79
	9	1	1~80
	8	1	1~81
	7	1	1~82
	6	1	1~83
	5	1	1~84
	4	1	1~85
	3	1	1~86
	2	1	1~87
	1	1	1~88

Annex A /B (4-wires)

E1 interface			Serial interface Ethernet interface
Channel	Number of slot	1st slot	Nx64K (Rate)
FULL (UNFRAMED)	-----	-----	1~40
PCM31 PCM31C	30	1	1~42
	28	1	1~44
	26	1	1~46
	24	1	1~48
	22	1	1~50
	20	1	1~52
	18	1	1~54
	16	1	1~56
	14	1	1~58
	12	1	1~60
	10	1	1~62
	8	1	1~64
	6	1	1~66
	4	1	1~68
	2	1	1~70
PCM30 PCM30C	30	1	1~42
	28	1	1~44
	26	1	1~46
	24	1	1~48
	22	1	1~50
	20	1	1~52
	18	1	1~54
	16	1	1~56
	14	1	1~58
	12	1	1~60
	10	1	1~62

	8	1	1~64
	6	1	1~66
	4	1	1~68
	2	1	1~70

Annex F/G (4-wire)

E1 interface			Serial interface Ethernet interface
Channel	Number of slot	1st slot	Nx64K (Rate)
FULL (UNFRAMED)	-----	-----	1~96
PCM31 PCM31C	30	1	1~98
	28	1	1~100
	26	1	1~102
	24	1	1~104
	22	1	1~106
	20	1	1~108
	18	1	1~110
	16	1	1~112
	14	1	1~114
	12	1	1~116
	10	1	1~118
	8	1	1~120
	6	1	1~122
	4	1	1~124
	2	1	1~126
PCM30 PCM30C	30	1	1~98
	28	1	1~100
	26	1	1~102
	24	1	1~104
	22	1	1~106
	20	1	1~108
	18	1	1~110
	16	1	1~112
	14	1	1~114
	12	1	1~116
	10	1	1~118
	8	1	1~120
	6	1	1~122
	4	1	1~124
	2	1	1~126

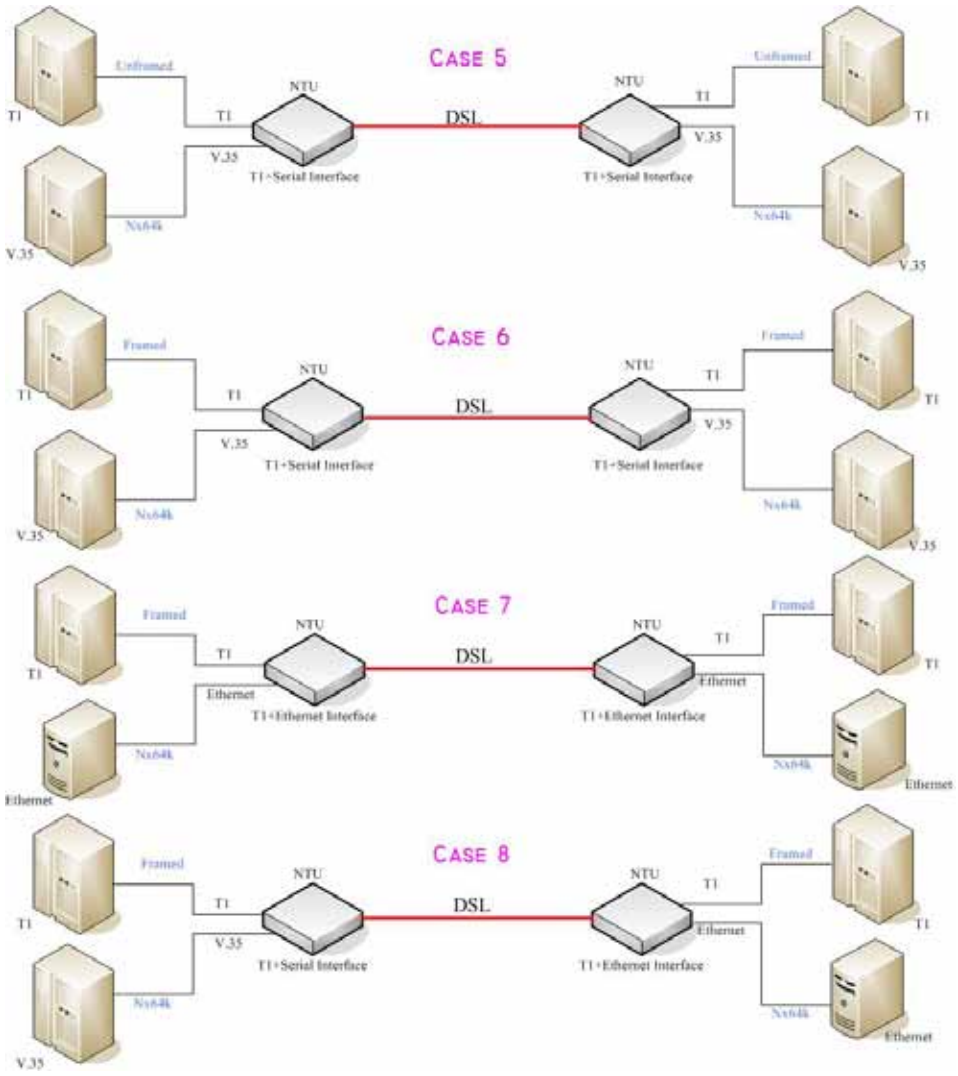

Case 5 T1(Unframed)+ Serial interface ←---------→ T1(Unframed)+ Serial interface

Case 6 T1(Framed)+ Serial interface ←---------→ T1(Framed)+ Serial interface

Case 7 T1(Framed)+ Ethernet interface ←---------→ T1(Framed)+ Ethernet interface

Case 8 T1(Framed)+ Serial interface ←---------→ T1(Framed)+ Ethernet interface

Table of T1+ Serial interface or T1+Ethernet interface mode on both sides

Annex A/B (2-wire)

T1 interface			Serial interface Ethernet interface
Channel	Number of slot	1st slot location	Nx64K (Rate) range
Unframed	--	--	1~12
SF	23	1	1~13
ESF	22	1	1~14
	21	1	1~15
	20	1	1~16
	19	1	1~17
	18	1	1~18
	17	1	1~19
	16	1	1~20

	15	1	1~21
	14	1	1~22
	13	1	1~23
	12	1	1~24
	11	1	1~25
	10	1	1~26
	9	1	1~27
	8	1	1~28
	7	1	1~29
	6	1	1~30
	5	1	1~31
	4	1	1~32
	3	1	1~33
	2	1	1~34
	1	1	1~35

Annex G/F (2-wire)

T1 interface			Serial interface Ethernet interface
Channel	Number of slot	1st slot location	Nx64K (Rate) range
SF ESF	24	1	1~65
	23	1	1~66
	22	1	1~67
	21	1	1~68
	20	1	1~69
	19	1	1~70
	18	1	1~71
	17	1	1~72
	16	1	1~73
	15	1	1~74
	14	1	1~75
	13	1	1~76
	12	1	1~77
	11	1	1~78
	10	1	1~79
	9	1	1~80
	8	1	1~81
	7	1	1~82
	6	1	1~83
	5	1	1~84
	4	1	1~85
	3	1	1~86
	2	1	1~87
	1	1	1~88

Annex A/B (4-wire)

T1 interface			Serial interface Ethernet interface
Channel	Number of slot	1st slot location	Nx64K (Rate) range
Unframed	--	--	1~48
SF	24	1	1~48
ESF	22	1	1~50

	20	1	1~52
	18	1	1~54
	16	1	1~56
	14	1	1~58
	12	1	1~60
	10	1	1~62
	8	1	1~64
	6	1	1~66
	4	1	1~68
	2	1	1~70

Annex G/F (4-wire)

T1 interface			Serial interface Ethernet interface
Channel	Number of slot	1st slot location	Nx64K (Rate) range
Unframed	--	--	1~104
SF ESF	24	1	1~104
	22	1	1~106
	20	1	1~108
	18	1	1~110
	16	1	1~112
	14	1	1~114
	12	1	1~116
	10	1	1~118
	8	1	1~120
	6	1	1~122
	4	1	1~124
	2	1	1~126

Dual interface vs. Single interface

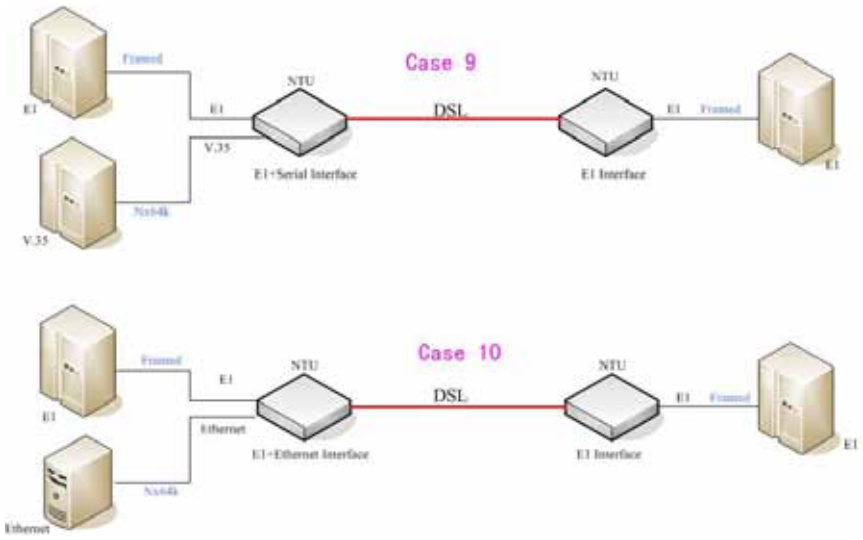

Case 9 E1(framed)+ Serial interface ←---------→ E1(framed)

Case 10 E1(framed)+Ethernet interface ←---------→E1(framed)

Table of **E1+ Serial interface to E1 interface** and **E1+Ethernet interface to E1 interface** mode on both sides

Annex A /B/F/G (2-wires)

E1 interface			Serial interface Ethernet interface
Channel	Number of slot	1st slot	Nx64K (Rate)
PCM31 PCM31C	30	1	1
	29	1	1~2
	28	1	1~3
	27	1	1~4
	26	1	1~5
	25	1	1~6
	24	1	1~7
	23	1	1~8
	22	1	1~9
	21	1	1~10
	20	1	1~11
	19	1	1~12
	18	1	1~13
	17	1	1~14
	16	1	1~15
	15	1	1~16
	14	1	1~17
	13	1	1~18
	12	1	1~19
	11	1	1~20
	10	1	1~21
	9	1	1~22
	8	1	1~23
	7	1	1~24
	6	1	1~25

	5	1	1~26
	4	1	1~27
	3	1	1~28
	2	1	1~29
	1	1	1~30
PCM30 PCM30C	29	1	1
	28	1	1~2
	27	1	1~3
	26	1	1~4
	25	1	1~5
	24	1	1~6
	23	1	1~7
	22	1	1~8
	21	1	1~9
	20	1	1~10
	19	1	1~11
	18	1	1~12
	17	1	1~13
	16	1	1~14
	15	1	1~15
	14	1	1~16
	13	1	1~17
	12	1	1~18
	11	1	1~19
	10	1	1~20
	9	1	1~21
	8	1	1~22
	7	1	1~23
	6	1	1~24
	5	1	1~25
	4	1	1~26
	3	1	1~27
	2	1	1~28
	1	1	1~29

Annex A /B/F/G (4-wires)

E1 interface			Serial interface Ethernet interface
Channel	Number of slot	1st slot	Nx64K (Rate)
PCM31 PCM31C	29	1	1
	28	1	2
	27	1	1,3
	26	1	2,4
	25	1	1,3,5
	24	1	2,4,6
	23	1	1,3,5,7
	22	1	2,4,6,8
	21	1	1,3,5,7,9
	20	1	2,4,6,8,10
	19	1	1,3,5,7,9,11
	18	1	2,4,6,8,10,12

	17	1	1,3,5,7,9,11,13
	16	1	2,4,6,8,10,12,14
	15	1	1,3,5,7,9,11,13,15
	14	1	2,4,6,8,10,12,14,16
	13	1	1,3,5,7,9,11,13,15,17
	12	1	2,4,6,8,10,12,14,16,18
	11	1	1,3,5,7,9,11,13,15,17,19
	10	1	2,4,6,8,10,12,14,16,18,20
	9	1	1,3,5,7,9,11,13,15,17,19,21
	8	1	2,4,6,8,10,12,14,16,18,20,22
	7	1	1,3,5,7,9,11,13,15,17,19,21,23
	6	1	2,4,6,8,10,12,14,16,18,20,22,24
	5	1	1,3,5,7,9,11,13,15,17,19,21,23,25
	4	1	2,4,6,8,10,12,14,16,18,20,22,24,26
	3	1	1,3,5,7,9,11,13,15,17,19,21,23,25,27
	2	1	2,4,6,8,10,12,14,16,18,20,22,24,26,28
	1	1	1,3,5,7,9,11,13,15,17,19,21,23,25,27,29
PCM30 PCM30C	29	1	1
	28	1	2
	27	1	1,3
	26	1	2,4
	25	1	1,3,5
	24	1	2,4,6
	23	1	1,3,5,7
	22	1	2,4,6,8
	21	1	1,3,5,7,9
	20	1	2,4,6,8,10
	19	1	1,3,5,7,9,11
	18	1	2,4,6,8,10,12
	17	1	1,3,5,7,9,11,13
	16	1	2,4,6,8,10,12,14
	15	1	1,3,5,7,9,11,13,15
	14	1	2,4,6,8,10,12,14,16
	13	1	1,3,5,7,9,11,13,15,17
	12	1	2,4,6,8,10,12,14,16,18
	11	1	1,3,5,7,9,11,13,15,17,19
	10	1	2,4,6,8,10,12,14,16,18,20
	9	1	1,3,5,7,9,11,13,15,17,19,21
	8	1	2,4,6,8,10,12,14,16,18,20,22
	7	1	1,3,5,7,9,11,13,15,17,19,21,23
	6	1	2,4,6,8,10,12,14,16,18,20,22,24
	5	1	1,3,5,7,9,11,13,15,17,19,21,23,25
	4	1	2,4,6,8,10,12,14,16,18,20,22,24,26
	3	1	1,3,5,7,9,11,13,15,17,19,21,23,25,27
	2	1	2,4,6,8,10,12,14,16,18,20,22,24,26,28
	1	1	1,3,5,7,9,11,13,15,17,19,21,23,25,27,29

Note: the E1 first time slot should be 1

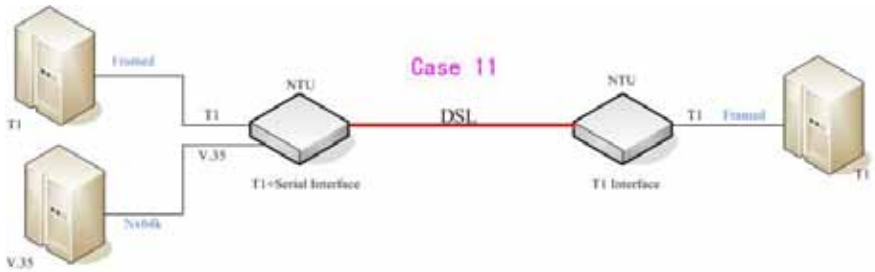

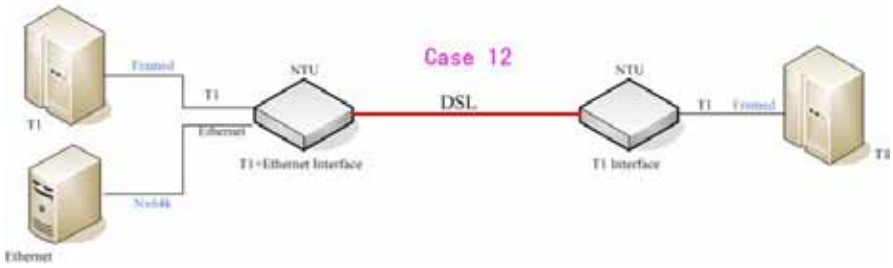

Case 11 T1(framed)+ Serial interface ←----------→ T1(framed)

Case 12 T1(framed)+Ethernet interface ←---------→T1(framed)

Table of **T1+ Serial interface to T1 interface and T1+Ethernet interface to T1 interface** mode on both sides

Annex A /B/F/G (2-wires)

E1 interface			Serial interface Ethernet interface
Channel	Number of slot	1st slot	Nx64K (Rate)
SF ESF	23	1	1
	22	1	1~2
	21	1	1~3
	20	1	1~4
	19	1	1~5
	18	1	1~6
	17	1	1~7
	16	1	1~8
	15	1	1~9
	14	1	1~10
	13	1	1~11
	12	1	1~12
	11	1	1~13
	10	1	1~14
	9	1	1~15
	8	1	1~16
	7	1	1~17
	6	1	1~18
	5	1	1~19
	4	1	1~20
	3	1	1~21
	2	1	1~22
	1	1	1~23

Note: the T1 first time slot should be 1

Annex A /B/F/G (4-wires)

T1 interface			Serial interface Ethernet interface
Channel	Number of slot	1st slot	Nx64K (Rate)
SF ESF	23	1	1
	22	1	2
	21	1	1,3
	20	1	2,4
	19	1	1,3,5
	18	1	2,4,6
	17	1	1,3,5,7
	16	1	2,4,6,8
	15	1	1,3,5,7,9
	14	1	2,4,6,8,10
	13	1	1,3,5,7,9,11
	12	1	2,4,6,8,10,12
	11	1	1,3,5,7,9,11,13
	10	1	2,4,6,8,10,12,14
	9	1	1,3,5,7,9,11,13,15
	8	1	2,4,6,8,10,12,14,16
	7	1	1,3,5,7,9,11,13,15,17
	6	1	2,4,6,8,10,12,14,16,18
	5	1	1,3,5,7,9,11,13,15,17,19
	4	1	2,4,6,8,10,12,14,16,18,20
	3	1	1,3,5,7,9,11,13,15,17,19,21
	2	1	2,4,6,8,10,12,14,16,18,20,24
	1	1	1,3,5,7,9,11,13,15,17,19,21,23

Note: the T1 first time slot should be 1

3.6 Sub-menu tree for REBOOT SYSTEM

REBOOT SYSTEM -> * REBOOT * YES -> press ”ENTER” key

Some settings request system reboot for the setting to take effect.

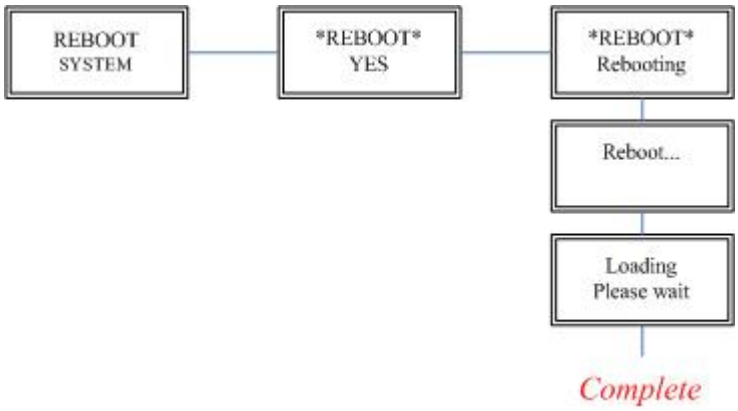

3.7 Sub-Menu tree for DISGNOSTIC

3.7.1. Loopback function

SYSTEM DIAGNOSTIC ➔ DIAG LOOPBACK

Note : there is no SYSTEM DIAGNOSTIC menu on the Ethernet Interface Model

If the device hasn't connected or it is under handshake, it will not support farend line, farend payload and V.54.

Stand alone NTU, no connection with other NTU:

E1/T1 interface CO side
Local digital
Local
Remote line
Remote payload

Serial interface CO side
Local digital
Local
Remote line
Remote payload

E1 /T1interface CPE side
Local digital
Remote line
Remote payload

Serial interface CPE side
Local digital
Remote line
Remote payload

After connection both CO side and CPE side:

E1/T1 interface CO side
Local digital
Local
Remote line
Remote payload
Farend line
Farend payload

Serial interface CO side
Local digital
Local
Remote line
Remote payload
Farend line
Farend payload
V.54

E1/T1 interface CPE side
Local digital
Remote line
Remote payload
Farend line
Farend payload

Serial interface CPE side
Local digital
Remote line
Remote payload
Farend line
Farend payload
V.54

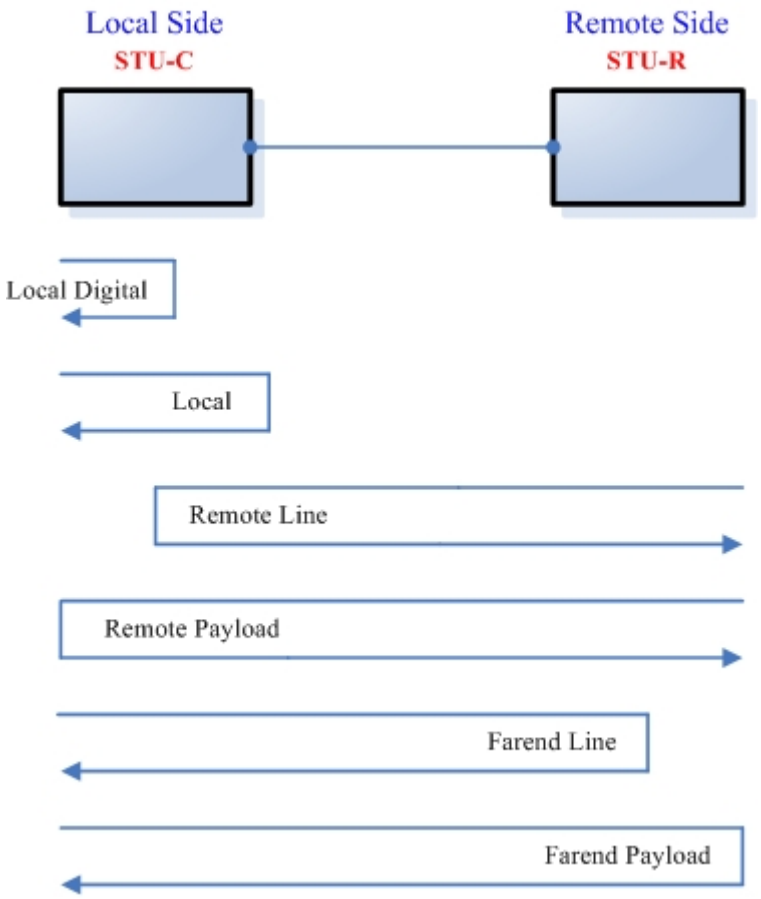
Local Side
STU-C
Remote Side
STU-R
Local Digital
Local
Remote Line
Remote Payload
Farend Line
Farend Payload

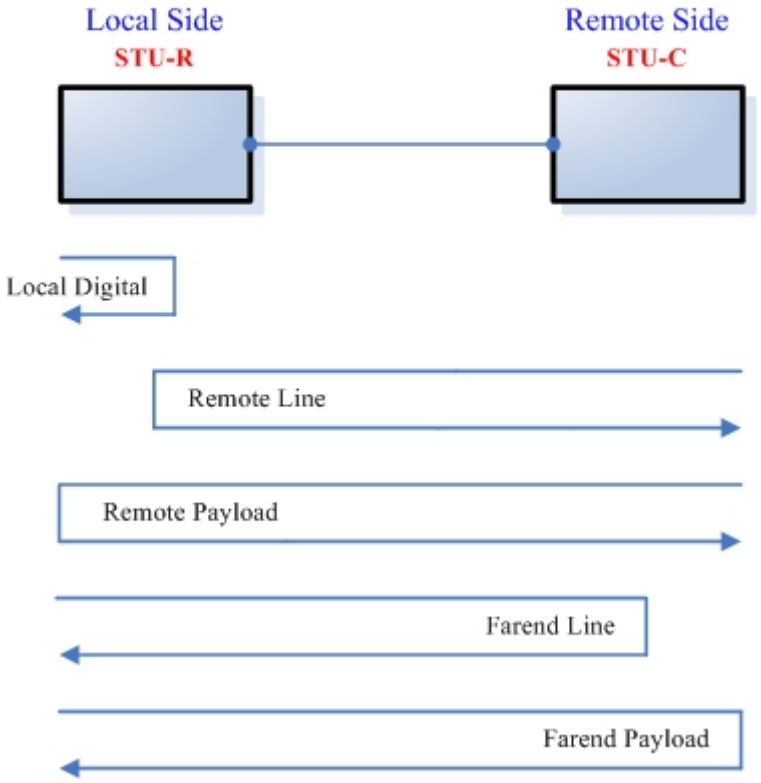
Local Side
STU-R
Remote Side
STU-C
Local Digital
Remote Line
Remote Payload
Farend Line
Farend Payload

E1 Interface

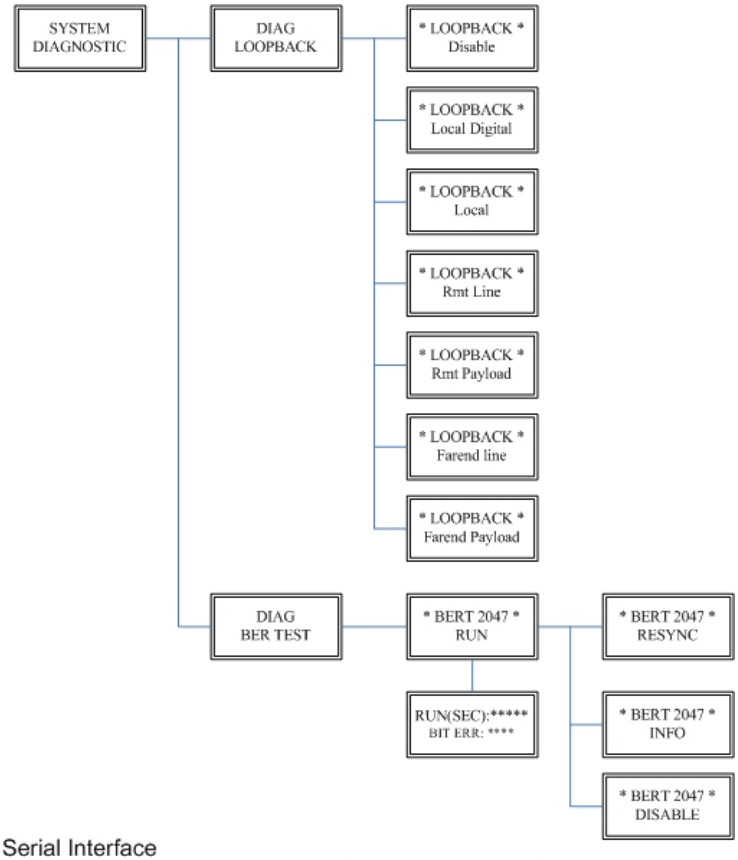

Serial Interface

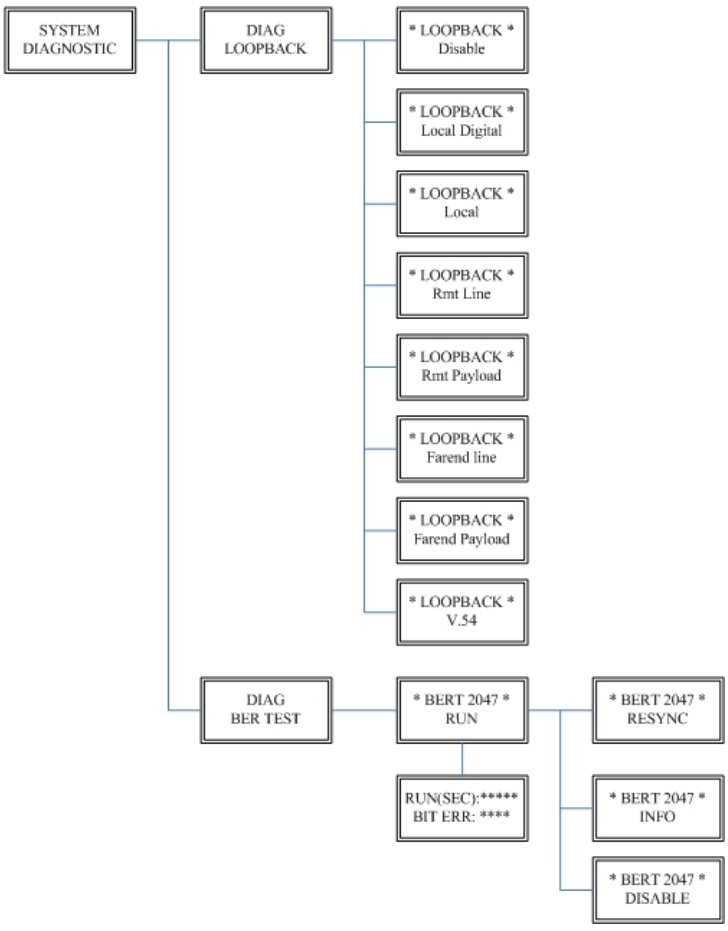

3.7.2. BER Test function

SYSTEM DIAGNOSTIC ➔ DIAG BER TEST

This is the internal Bit Error Rate Tester (BERT) for complete testing of local and remote modem and the link quality without any external test equipment.

This built-in Bit Error Rate Test generator can generate a standard 2047 (2^{11}-1) test pattern.

DIAG
BER TEST

BERT 2047
RUN

When the BERT doesn't have Bit Errors, it shows zero. Otherwise, it will show some number counter.

RUN(SEC) item shows the time elapsed in seconds

RUN(SEC): 00001
BIT ERR: 00000

If there is NO SYNC on bit error message, it is because the testing path hasn't been connected.

RUN(SEC): 00001
BIT ERR: NO SYNC

Press ENTER key on this display message, it will re-sync again.

BERT 2047
RESYNC

Press ENTER key on this display message, it will show the real time status of this testing.

BERT 2047
INFO

If you want to exit the BERT, please press **ENTER** key from this display message.

BERT 2047
DISABLE

4. Parameters Table

There are many parameters tables for end user easily to write down all setting of devices before installing those on sites.

4.1 UM-SNB/E1/UM-SNB/E1/4w

4.1.1. UM-SNB/E1/UM-SNB/E1/4w E1 Interface Model -- E1 interface mode

NTU	Type	□STU-R □STU-C-INTCLK □STU-C-EXTCLK
SHDSL	Annex	□A □B □F □G
	PSD	□SYM □ASYM
	SNR Margin	(-10~21)
	Pair Mode	□1 Pair □2 pair (For UM-SNB/E1/4w only)
E1	Channel	□PCM31 □PCM31C □PCM30 □PCM30C □Unframed
	Pass Through	□Off □On
	Slot Number	
	First Slot	
	Code	□HDB3 □AMI
	AIS	□Off □On
	Build Outs	□75 Ohm □120 Ohm

When SHDSL.bis using 2-pairs (4-wires), the E1 time slot number can only use even number

When E1 framer is PCM31C and PCM30C and set pass through ON, no fractional function can be use.

4.2 UM-SNB/35/ UM-SNB/35/4w

4.2.1. UM-SNB/35/ UM-SNB/35/4w Serial Interface Model -- Serial interface mode

NTU	Type	□STU-R □STU-C-INTCLK □STU-C-EXTCLK		
SHDSL	Annex	□A □B □F □G		
	PSD	□SYM □ASYM		
	SNR Margin	(-10~21)		
	Pair Mode	□1 Pair □2 pair (For UM-SNB/35/4w only)		
Serial	Interface	□V.35 □X.21		
	Data Rate	□Nx64K □T1 mode		
		1 Pair	Annex A/B	(1~36)
			Annex F/G	(1~89)
		2 Pair	Annex A/B	(2~72)
			Annex F/G	(2~128)
	Clock	□Normal □Inverse		
	RTS	□On □From DTE		
	CTS	□On □Off □From RTS		
	DSR	□On □Off □From DTR		
	DCD	□On □Off □From DSL		
	Delay	□0mS □1mS □2mS □3mS		

When SHDSL.bis using 2-pairs (4-wires), the Serial Nx64K data rate number can only use even number

4.3 UM-SNB/L / UM-SNB/L/4w

4.3.1. UM-SNB/L / UM-SNB/L/4w Ethernet Interface model -- Ethernet interface mode

NTU	Type	□STU-R □STU-C-INTCLK □STU-C-EXTCLK		
SHDSL	Annex	□A □B □F □G		
	PSD	□SYM □ASYM		
	SNR Margin	(-10~21)		
	Pair Mode	□1 Pair □2 pair (For UM-SNB/L/4w only)		
Ethernet	Date Rate	□Nx64K □T1 mode		
		1 Pair	Annex A/B	(1~36)
			Annex F/G	(1~89)
		2 Pair	Annex A/B	(2~72)
			Annex F/G	(2~178)
	Auto Config	□Disable □Enable		
	Duplex	□Full □Half		
	Speed	□100M □10M		

When SHDSL.bis using 2-pairs (4-wires), the Ethernet Nx64K data rate number can only use even number

4.4 UM-SNB/3in1/UM-SNB/3in1/4w

4.4.1. UM-SNB/3in1/ UM-SNB/3in1/4w E1+Serial+Ethernet interface model -- E1 Interface mode

NTU	Interface	☒E1 □Serial □Ethernet □E1+Serial □E1+Ethernet
	Type	□STU-R □STU-C-INTCLK □STU-C-EXTCLK
SHDSL	Annex	□A □B □F □G
	PSD	□SYM □ASYM
	SNR Margin	(-10~21)
	Pair Mode	□1 Pair □2 pair (For UM-SNB/3in1/4w only)
E1	Channel	□CM31 □PCM31C □PCM30 □PCM30C □Unframed
	Pass Through	□Off □On
	Slot Number	
	First Slot	
	Code	□HDB3 □AMI
	AIS	□Off □On
	Build Outs	□75 Ohm □120 Ohm

When SHDSL.bis using 2-pairs (4-wires), the E1 time slot number can only use even number

When E1 framer is PCM31C and PCM30C and set pass through ON, no fractional function can be use.

4.4.2. UM-SNB/3in1 / UM-SNB/3in1/4w E1+Serial+Ethernet interface model -- Serial Interface mode

NTU	Interface	□E1 ☒Serial □Ethernet □E1+Serial □E1+Ethernet		
	Type	□STU-R □STU-C-INTCLK □STU-C-EXTCLK		
SHDSL	Annex	□A □B □F □G		
	PSD	□SYM □ASYM		
	SNR Margin	(-10~21)		
	Pair Mode	□1 Pair □2 pair (For UM-SNB/3in1/4w only)		
Serial	Interface	□V.35 □X.21		
	Data Rate	□Nx64K □T1 mode		
		1 Pair	Annex A/B	(1~36)
			Annex F/G	(1~89)
		2 Pair	Annex A/B	(2~72)
			Annex F/G	(2~128)
	Clock	□Normal □Inverse		
	RTS	□On □From DTE		
	CTS	□On □Off □From RTS		
	DSR	□On □Off □From DTR		
	DCD	□On □Off □From DSL		
	Delay	□0mS □1mS □2mS □3mS		

When SHDSL.bis using 2-pairs (4-wires), the Serial Nx64K data rate number can only use even number

4.4.3. UM-SNB/3in1 / UM-SNB/3in1/4w E1+Serial+Ethernet interface model -- Ethernet Interface mode

NTU	Interface	□E1 □Serial ☒Ethernet □E1+Serial □E1+Ethernet		
	Type	□STU-R □STU-C-INTCLK □STU-C-EXTCLK		
SHDSL	Annex	□A □B □F □G		
	PSD	□SYM □ASYM		
	SNR Margin	(-10~21)		
	Pair Mode	□1 Pair □2 pair (For UM-SNB/3in1/4w only)		
Ethernet	Date Rate	□Nx64K □T1 mode		
		1 Pair	Annex A/B	(1~36)
			Annex F/G	(1~89)
		2 Pair	Annex A/B	(2~72)
			Annex F/G	(2~178)
	Auto Config	□Disable □Enable		
	Duplex	□Full □Half		
	Speed	□100M □10M		

When SHDSL.bis using 2-pairs (4-wires), the Ethernet Nx64K data rate number can only use even number

4.4.4. UM-SNB/3in1 / UM-SNB/3in1/4w E1+Serial+Ethernet interface model -- E1+Serial Interface mode

NTU	Interface	□E1 □Serial □Ethernet ☒E1+Serial □E1+Ethernet
	Type	□STU-R □STU-C-INTCLK □STU-C-EXTCLK
SHDSL	Annex	□A □B □F □G
	PSD	□SYM □ASYM
	SNR Margin	(-10~21)
	Pair Mode	□1 Pair □2 pair (For UM-SNB/3in1/4w only)
E1	Channel	□PCM31 □PCM31C □PCM30 □PCM30C □Unframed
	Slot Number	
	First Slot	
	Code	□HDB3 □AMI
	AIS	□Off □On
	Build Outs	□75 Ohm □120 Ohm
Serial	Interface	□V.35 □X.21
	Data Rate	□Nx64K □T1 mode
	Clock	□Normal □Inverse
	RTS	□On □From DTE
	CTS	□On □Off □From RTS
	DSR	□On □Off □From DTR
	DCD	□On □Off □From DSL
	Delay	□0mS □1mS □2mS □3mS

When SHDSL.bis using 2-pairs (4-wires), the E1 time slot number and Serial Nx64K data rate number can only use even number.

When E1 framer is PCM31C and PCM30C and set pass through ON, no fractional function can be use.

4.4.5. UM-SNB/3in1 / UM-SNB/3in1/4w E1+Serial+Ethernet interface model -- E1+Ethernet Interface mode

NTU	Interface	□E1 □Serial □Ethernet □E1+Serial ☒E1+Ethernet
	Type	□STU-R □STU-C-INTCLK □STU-C-EXTCLK
SHDSL	Annex	□A □B □F □G
	PSD	□SYM □ASYM
	SNR Margin	(-10~21)
	Pair Mode	□1 Pair □2 pair (For UM-SNB/3in1/4w only)
E1	Channel	□PCM31 □PCM31C □PCM30 □PCM30C □Unframed
	Slot Number	
	First Slot	
	Code	□HDB3 □AMI
	AIS	□Off □On
	Build Outs	□75 Ohm □120 Ohm
Ethernet	Date Rate	□Nx64K □T1 mode
	Auto Config	□Disable □Enable
	Duplex	□Full □Half
	Speed	□100M □10M

When SHDSL.bis using 2-pairs(4-wires), the E1 time slot number and Ethernet Nx64K data rate number can only use even number

When E1 framer is PCM31C and PCM30C and set pass through ON, no fractional function can be use.

4.5 UM-SNB/703/UM-SNB/703/4w

4.5.1. UM-SNB/703 / UM-SNB/703/4w E1+T1 interface model -- E1 Interface mode

NTU	Interface	☒E1 □T1
	Type	□STU-R □STU-C-INTCLK □STU-C-EXTCLK
SHDSL	Annex	□A □B □F □G
	PSD	□SYM □ASYM
	SNR Margin	(-10~21)
	Pair Mode	□1 Pair □2 pair (For UM-SNB/4in1/4w only)
E1	Channel	□PCM31 □PCM31C □PCM30 □PCM30C □Unframed
	Pass Through	□Off □On
	Slot Number	
	First Slot	
	Code	□HDB3 □AMI
	AIS	□Off □On
	Build Outs	□75 Ohm □120 Ohm

When SHDSL.bis using 2-pairs(4-wires), the E1 time slot number can only use even number

When E1 framer is PCM31C and PCM30C and set pass through ON, no fractional function can be use.

4.5.2. UM-SNB/703 / UM-SNB/703/4w E1+T1 interface model -- T1 Interface mode

NTU	Interface	□E1 ☒T1
	Type	□STU-R □STU-C-INTCLK □STU-C-EXTCLK
SHDSL	Annex	□A □B □F □G
	PSD	□SYM □ASYM
	SNR Margin	(-10~21)
	Pair Mode	□1 Pair □2 pair (For UM-SNB/4in1/4w only)
T1	Channel	□SF □ESF □Unframed
	Slot Number	
	First Slot	
	LBO	□0~133ft □133~266ft □266~399ft □399ft~533ft □533~655ft
	AIS	□Off □On

When SHDSL.bis using 2-pairs(4-wires), the T1 time slot number can only use even number

4.6 UM-SNB/4in1/UM-SNB/4in1/4w

4.6.1. UM-SNB/4in1 / UM-SNB/4in1/4w E1+T1+Serial + Ethernet interface model -- E1 Interface mode

NTU	Interface	☒E1 □Serial □Ethernet □E1+Serial □E1+Ethernet □T1 □T1+Serial □T1+Ethernet
	Type	□STU-R □STU-C-INTCLK □STU-C-EXTCLK
SHDSL	Annex	□A □B □F □G
	PSD	□SYM □ASYM
	SNR Margin	(-10~21)
	Pair Mode	□1 Pair □2 pair (For UM-SNB/4in1/4w only)
E1	Channel	□CM31 □PCM31C □PCM30 □PCM30C □Unframed
	Pass Through	□Off □On
	Slot Number	
	First Slot	
	Code	□HDB3 □AMI
	AIS	□Off □On
	Build Outs	□75 Ohm □120 Ohm

When SHDSL.bis using 2-pairs(4-wires), the E1 time slot number can only use even number

When E1 framer is PCM31C and PCM30C and set pass through ON, no fractional function can be use.

4.6.2. UM-SNB/4in1 / UM-SNB/4in1/4w E1+T1 +Serial+ Ethernet interface model -- T1 Interface mode

NTU	Interface	□E1 □Serial □Ethernet □E1+Serial □E1+Ethernet ☒T1 □T1+Serial □T1+Ethernet
	Type	□STU-R □STU-C-INTCLK □STU-C-EXTCLK
SHDSL	Annex	□A □B □F □G
	PSD	□SYM □ASYM
	SNR Margin	(-10~21)
	Pair Mode	□1 Pair □2 pair (For UM-SNB/4in1/4w only)
T1	Channel	□SF □ESF □Unframed
	Slot Number	
	First Slot	
	LBO	□0~133ft □133~266ft □266~399ft □399ft~533ft □533~655ft
	AIS	□Off □On

When SHDSL.bis using 2-pairs(4-wires), the T1 time slot number can only use even number

4.6.3. UM-SNB/4in1 / UM-SNB/4in1/4w E1+T1 +Serial+ Ethernet interface model -- Serial Interface mode

NTU	Interface	□E1 ☒Serial □Ethernet □E1+Serial □E1+Ethernet □T1 □T1+Serial □T1+Ethernet		
	Type	□STU-R □STU-C-INTCLK □STU-C-EXTCLK		
SHDSL	Annex	□A □B □F □G		
	PSD	□SYM □ASYM		
	SNR Margin	(-10~21)		
	Pair Mode	□1 Pair □2 pair (For UM-SNB/4in1/4w only)		
Serial	Interface	□V.35 □X.21		
	Data Rate	□Nx64K □T1 mode		
		1 Pair	Annex A/B	(1~36)
			Annex F/G	(1~89)
		2 Pair	Annex A/B	(2~72)
			Annex F/G	(2~128)
	Clock	□Normal □Inverse		
	RTS	□On □From DTE		
	CTS	□On □Off □From RTS		
	DSR	□On □Off □From DTR		
	DCD	□On □Off □From DSL		
	Delay	□0mS □1mS □2mS □3mS		

When SHDSL.bis using 2-pairs(4-wires), the Serial Nx64K data rate number can only use even number

4.6.4. UM-SNB/4in1 / UM-SNB/4in1/4w E1+T1 +Serial+ Ethernet interface model -- Ethernet Interface mode

NTU	Interface	□E1 □Serial ☒Ethernet □E1+Serial □E1+Ethernet □T1 □T1+Serial □T1+Ethernet		
	Type	□STU-R □STU-C-INTCLK □STU-C-EXTCLK		
SHDSL	Annex	□A □B □F □G		
	PSD	□SYM □ASYM		
	SNR Margin	(-10~21)		
	Pair Mode	□1 Pair □2 pair (For UM-SNB/4in1/4w only)		
Ethernet	Date Rate	□Nx64K □T1 mode		
		1 Pair	Annex A/B	(1~36)
			Annex F/G	(1~89)
		2 Pair	Annex A/B	(2~72)
			Annex F/G	(2~178)
	Auto Config	□Disable □Enable		
	Duplex	□Full □Half		
	Speed	□100M □10M		

When SHDSL.bis using 2-pairs(4-wires), the Ethernet Nx64K data rate number can only use even number

4.6.5. UM-SNB/4in1 / UM-SNB/4in1/4w E1+T1 +Serial+ Ethernet interface model -- E1+ Serial Interface mode

NTU	Interface	□E1 □Serial □Ethernet ☒E1+Serial □E1+Ethernet □T1 □T1+Serial □T1+Ethernet
	Type	□STU-R □STU-C-INTCLK □STU-C-EXTCLK
SHDSL	Annex	□A □B □F □G
	PSD	□SYM □ASYM
	SNR Margin	(-10~21)
	Pair Mode	□1 Pair □2 pair (For UM-SNB/4in1/4w only)
E1	Channel	□PCM31 □PCM31C □PCM30 □PCM30C □Unframed
	Slot Number	
	First Slot	
	Code	□HDB3 □AMI
	AIS	□Off □On
	Build Outs	□75 Ohm □120 Ohm
Serial	Interface	□V.35 □X.21
	Data Rate	□Nx64K □T1 mode
	Clock	□Normal □Inverse
	RTS	□On □From DTE
	CTS	□On □Off □From RTS
	DSR	□On □Off □From DTR
	DCD	□On □Off □From DSL
	Delay	□0mS □1mS □2mS □3mS

When SHDSL.bis using 2-pairs(4-wires), the E1 time slot number and Serial Nx64K data rate number can only use even number

When E1 framer is PCM31C and PCM30C and set pass through ON, no fractional function can be use.

4.6.6. UM-SNB/4in1 / UM-SNB/4in1/4w E1+T1 +Serial+ Ethernet interface model -- E1 + Ethernet Interface mode

NTU	Interface	□E1 □Serial □Ethernet □E1+Serial ☒E1+Ethernet □T1 □T1+Serial □T1+Ethernet
	Type	□STU-R □STU-C-INTCLK □STU-C-EXTCLK
SHDSL	Annex	□A □B □F □G
	PSD	□SYM □ASYM
	SNR Margin	(-10~21)
	Pair Mode	□1 Pair □2 pair (For UM-SNB/4in1/4w only)
E1	Channel	□PCM31 □PCM31C □PCM30 □PCM30C □Unframed
	Slot Number	
	First Slot	
	Code	□HDB3 □AMI
	AIS	□Off □On
	Build Outs	□75 Ohm □120 Ohm
Ethernet	Date Rate	□Nx64K □T1 mode
	Auto Config	□Disable □Enable
	Duplex	□Full □Half
	Speed	□100M □10M

When SHDSL.bis using 2-pairs(4-wires), the E1 time slot number and Ethernet Nx64K data rate can only use even number.

When E1 framer is PCM31C and PCM30C and set pass through ON, no fractional function can be use.

4.6.7. UM-SNB/4in1 / UM-SNB/4in1/4w E1+T1 +Serial+ Ethernet interface model -- T1+ Serial Interface mode

NTU	Interface	□E1 □Serial □Ethernet □E1+Serial □E1+Ethernet □T1 ☒T1+Serial □T1+Ethernet
	Type	□STU-R □STU-C-INTCLK □STU-C-EXTCLK
SHDSL	Annex	□A □B □F □G
	PSD	□SYM □ASYM
	SNR Margin	(-10~21)
	Pair Mode	□1 Pair □2 pair (For UM-SNB/4in1/4w only)
T1	Channel	□SF □ESF □Unframed
	Slot Number	
	First Slot	
	LBO	□0~133ft □133~266ft □266~399ft □399ft~533ft □533~655ft
	AIS	□Off □On
Serial	Interface	□V.35 □X.21
	Data Rate	□Nx64K □T1 mode
	Clock	□Normal □Inverse
	RTS	□On □From DTE
	CTS	□On □Off □From RTS
	DSR	□On □Off □From DTR
	DCD	□On □Off □From DSL
	Delay	□0mS □1mS □2mS □3mS

When SHDSL.bis using 2-pairs(4-wires), the T1 time slot number and Serial Nx64K data rate can only use even number.

4.6.8. UM-SNB/4in1 / UM-SNB/4in1/4w E1+T1 +Serial+ Ethernet interface model -- T1 + Ethernet Interface mode

NTU	Interface	□E1 □Serial □Ethernet □E1+Serial □E1+Ethernet □T1 □T1+Serial ☒T1+Ethernet
	Type	□STU-R □STU-C-INTCLK □STU-C-EXTCLK
SHDSL	Annex	□A □B □F □G
	PSD	□SYM □ASYM
	SNR Margin	(-10~21)
	Pair Mode	□1 Pair □2 pair (For UM-SNB/4in1/4w only)
T1	Channel	□SF □ESF □Unframed
	Slot Number	
	First Slot	
	LBO	□0~133ft □133~266ft □266~399ft □399ft~533ft □533~655ft
	AIS	□Off □On
Ethernet	Date Rate	□Nx64K □T1 mode
	Auto Config	□Disable □Enable
	Duplex	□Full □Half
	Speed	□100M □10M

When SHDSL.bis using 2-pairs(4-wires), the T1 time slot number and Ethernet Nx64K data rate number can only use even number.

5. Configuration with Console Port

This chapter will deal with the details of configuration and operation of this product via console port with terminal emulation program. The configuration of the UM-SNB NTU is performed via a menu-driven embedded software, using a standard ASCII terminal or a PC running a terminal emulation application connected to the rear panel CONSOLE port.

Windows includes a terminal emulation program called HyperTerminal. Connect the appropriated communication port from the PC to this device. After the physical connection is made, you are ready to configure this product. Make sure you have connected the supplied RS-232C serial cable (DB9F to RJ-45 Plug) to the console port on the rear panel of this product.

Run the terminal emulation program such as Hyper Terminal with the following setting:

Emulation: VT-100 compatible

Band rate: 115200, Data bits: 8, Parity: None, Stop Bits: 1, Flow Control: None

5.1 Login Procedure

At the start up screen, you will see:

Press the SPACE key until the login screen appears. When you see the login screen, you can logon to device. Username use “**admin**”. When the system prompts you for a password, type “**admin**” to enter is O.K.

5.2 Window structure

After you type the password, it will display the main menu.

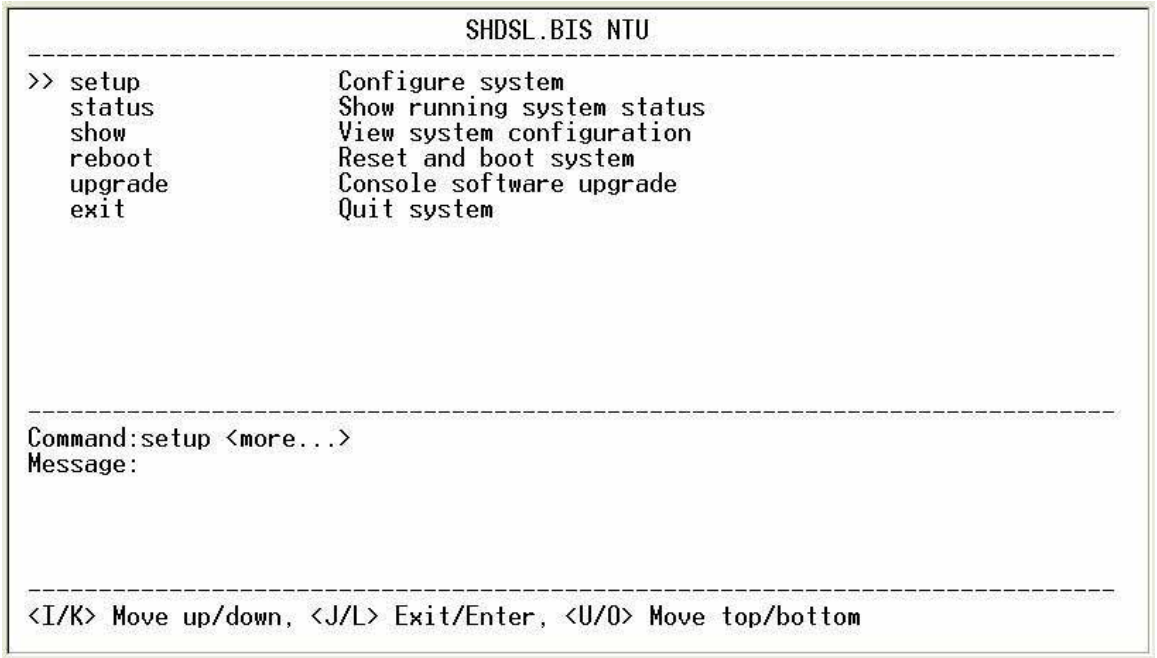

Above captured screen shows the common structure for all windows used throughout the configuration console terminal.

From top to bottom, the window is divided into four major sections.

The very top line displays the product name as “SHDSL.BIS NTU”.

Next a block of commands is listed where the ">>" symbol indicates the current cursor placeholder.

The next block down is the "command" section. The command that is selected and ready for execution is displayed after the "Command:" prompt. The "<more…> designation indicates that there are other sub menus for this command. The "Message:" field is used to display any special system messages or warnings.

Finally, at the very bottom of the screen is a help command line and reminder of the currently available command keys. In most cases, the keyboards four cursor keys can be used to navigate all the menu system. If for some reason your keyboard's cursor keys are not supported in the terminal emulation software, you may use the keys listed on the help command line.

Menu Commands

Before changing the configuration, familiarize yourself with the operations listed in the following table. The operation list will be shown on the window.

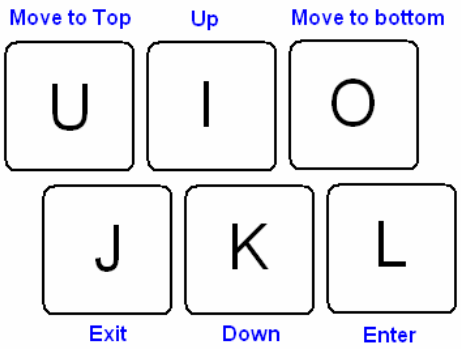

Keypads	Description
[UP] or **I**	Move to above field in the same level menu
[DOWN] or **K**	Move to below field in the same lever menu
U	Move to top field in the same level menu
O	Move to bottom field in the same level menu
[LEFT] or **J**	Move back to previous menu (Exit)
[RIGHT] , **L** or [ENTER]	Move forward to submenu(Enter)
[TAB]	To choose another parameters
Ctrl + C	To quit the show data display screen

5.3 Main Menu Summary

The main menu is prompted as following:

Menu Title	Function
Setup	Use this menu to setup SHDSL type, SHDSL parameters and E1/V.35/Ethernet parameters or restore factory default setting.
Status	Use this menu to show SHDSL status, E1 /V.35/Ethernet status and statistics or clear the statistics
Show	Use this menu to show general information, all configurations and all configurations in command script.
Reboot	Use this menu to reset and reboot the system
Diag	Use this menu to setup diagnostic utility
Upgrade	Use this menu to upgrade kernel and FPGA.
Exit	Use this menu to exit

When using one of the following cases, there will not be a diagnostic function on the main menu.

(1) Ethernet interface model.

(2) Multi-interfaces model, but working as Ethernet interface only.

5.4 Configuration

This section provides information about the configuration of UM-SNB NTU. Follow the procedures:

In the main menu, select **setup** and press [ENTER] or [RIGHT]

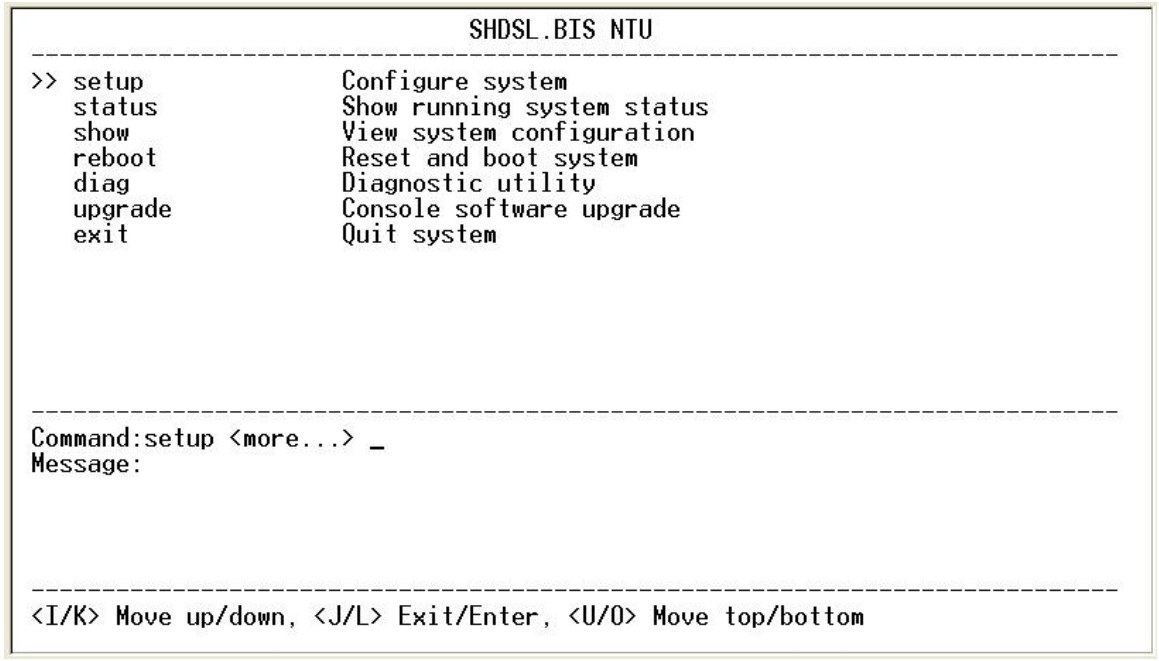

The screen will prompt as following:

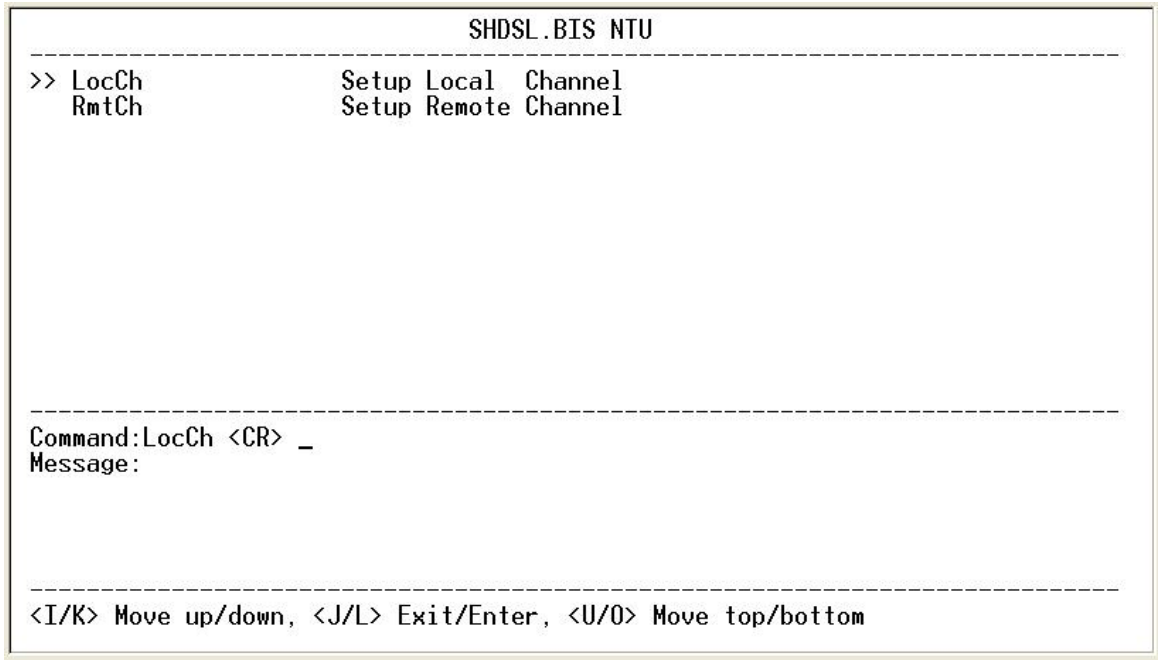

For setup the local side, select **LocCH** and press [ENTER] or [RIGHT].

Otherwise, setup the remote side by select **RmtCH.**

```
   CH A                          SHDSL.BIS NTU
--------------------------------------------------------------------------------
>> Interface          Configure NTU Interface
   Shdsl              Configure SHSDL Parameters
   E1                 Configure E1 Parameters
   Rmtcfg             Enable/Disable Remote Config
   Default            Restore NTU's Default Setting









--------------------------------------------------------------------------------
Command:Interface <CR>
Message:




--------------------------------------------------------------------------------
<I/K> Move up/down, <J/L> Exit/Enter, <U/O> Move top/bottom
```

5.4.1. Configure NTU Interface

Setup Interface

```
   CH A                          SHDSL.BIS NTU
--------------------------------------------------------------------------------
>> Interface          Configure NTU Interface
   Shdsl              Configure SHSDL Parameters
   E1                 Configure E1 Parameters
   Serial             Configure Serial Parameters
   Rmtcfg             Enable/Disable Remote Config
   Default            Restore NTU's Default Setting









--------------------------------------------------------------------------------
Command:Interface <CR>
Message: Please input the following information.

SHDSL Interface (TAB Select) <E1+Serial>: E1+Serial


--------------------------------------------------------------------------------
<I/K> Move up/down, <J/L> Exit/Enter, <U/O> Move top/bottom
```

If the SHDSL.bis NTU is the multi-interfaces model, it will display more types of interfaces that can be selected.

Model	Interface modes support
UM-SNB/E1 , UM-SNB/E1/4w E1 interface model	E1
UM-SNB/703 , UM-SNB/703/4w E1 + T1 interface model	E1
	T1
UM-SNB/35 , UM-SNB/35/4w Serial interface model	Serial
UM-SNB/L , UM-SNB/L/4w Ethernet interface model	Ethernet
UM-SNB/3in1 , UM-SNB/3in1/4w E1+Serial+Ethernet interface model	E1
	Serial
	Ethernet
	E1+Serial
	E1+Ethernet
UM-SNB/4in1 , UM-SNB/4in1/4w E1+T1+ Serial +Ethernet interface model	E1
	T1
	Serial
	Ethernet
	E1+Serial
	E1+Ethernet
	T1 + Serial
	T1 + Ethernet

5.4.2. Configure SHDSL parameters

This section shows how to setup the SHDSL parameters: **SHDSL Mode**, **Annex type**, **Psd Mask**, **SNR margin**.
Select **Shdsl,** and press [ENTER] or [RIGHT].

Setup SHDSL Parameter, Mode

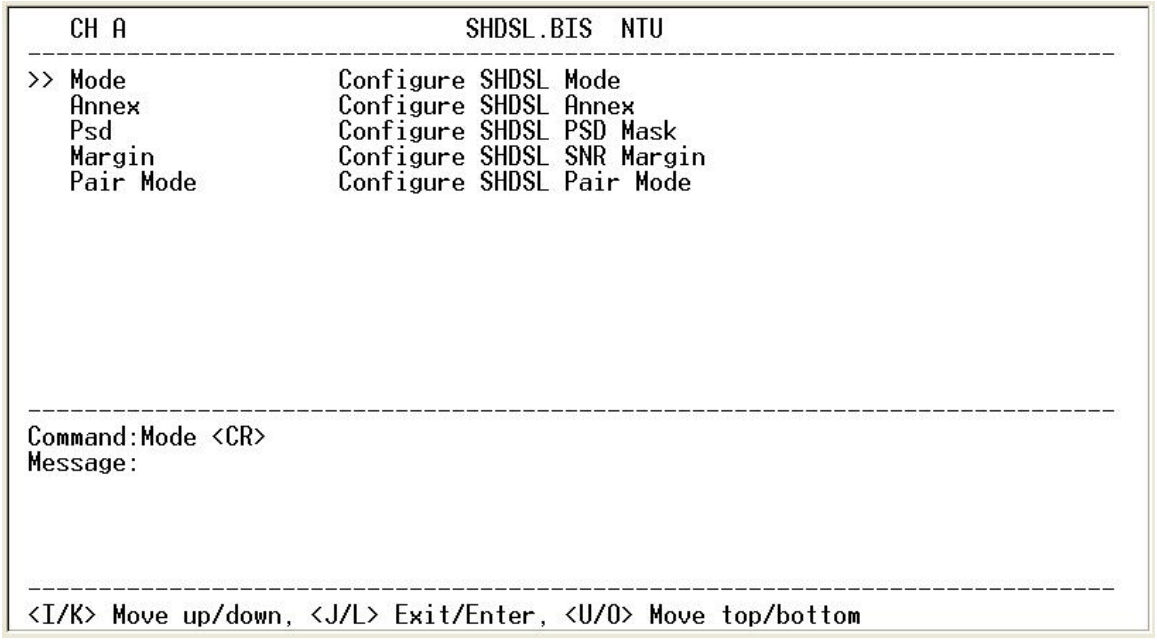

Press [TAB] to select the operating type and press enter to finish setting.

The SHDSL modes have three types: **STU-R**, **STU-C-INTCLK** and **STU-C-EXTCLK**

INTCLK: The device will generate the appropriate clock speed defined by the speed setting of the interface.

EXTCLK: The device will accept the clock from the interface and will use that clock to receive and transmit data across the interface.

Most applications use Internal Clock. If the DTE provides a clock with TX data, the clock can be set to External Clock.

To set the SHDSL Annex type, move the cursor to **Annex** and press [ENTER]. Select the annex type by using [TAB] key.

Set Up SHDSL parameter, Annex

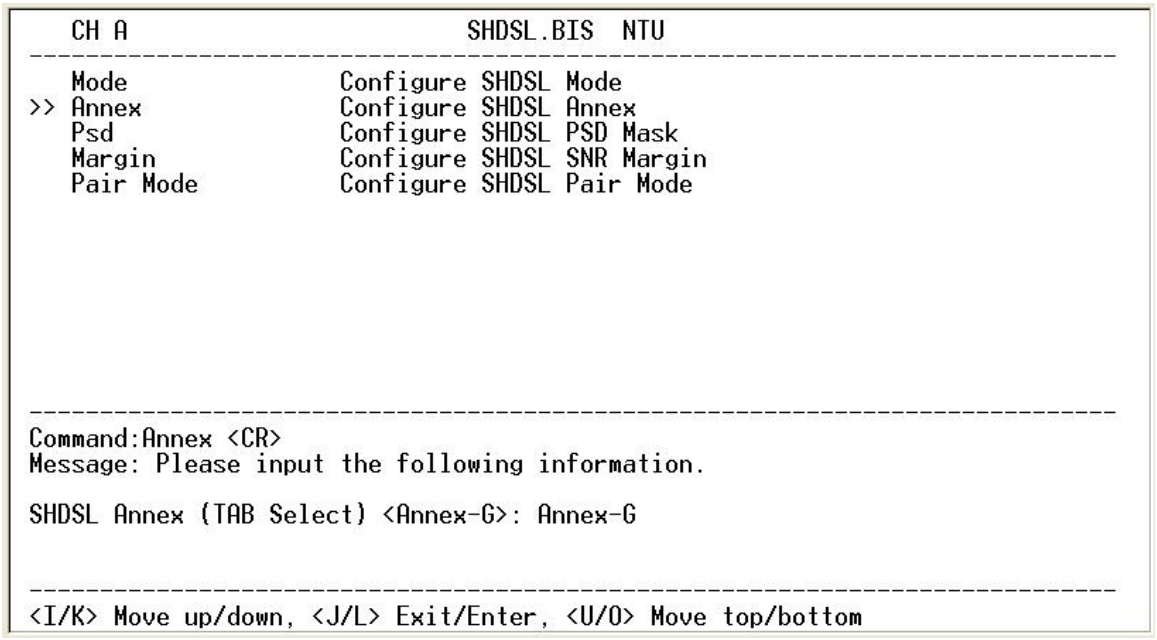

The Annex has four types: A, B, F and G.

To configure the SHDSL PSD, move the cursor to **psd** and press [ENTER]. Select the parameter via [TAB] key.

Set up SHDSL parameter, PSD

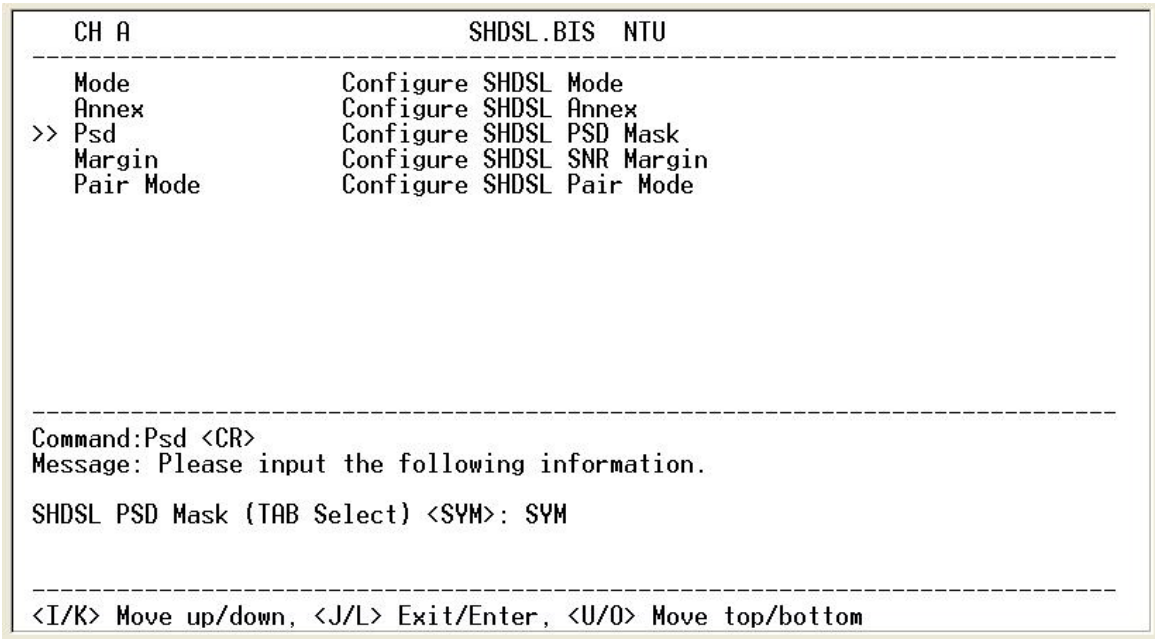

The PSD has two types: **SYM** and **ASYM**.

To set the SHDSL Margin, move the cursor to **margin** and press [ENTER]. Select the margin via [TAB] key and key in the Next margin.

Setup SHDSL parameter, SNR Margin

```
   CH A                          SHDSL.BIS  NTU
--------------------------------------------------------------------------------
   Mode                Configure SHDSL Mode
   Annex               Configure SHDSL Annex
   Psd                 Configure SHDSL PSD Mask
>> Margin              Configure SHDSL SNR Margin
   Pair Mode           Configure SHDSL Pair Mode









--------------------------------------------------------------------------------
Command:Margin <CR>
Message: Please input the following information.

SHDSL Margin  <3> (-10~21): 3


--------------------------------------------------------------------------------
<I/K> Move up/down, <J/L> Exit/Enter, <U/O> Move top/bottom
```

SNR margin is an index of line connection. You can see the actual SNR margin in STATUS SHDSL. The larger SNR margin, the better line connection. For example, if you set SNR margin in the field as 3, the SHDSL connection will drop down and reconnect when the SNR margin is lower than 3. The setting range is -10 to 21.

Setup SHDSL parameter, Pair Mode

```
   CH A                          SHDSL.BIS  NTU
--------------------------------------------------------------------------------
   Mode                Configure SHDSL Mode
   Annex               Configure SHDSL Annex
   Psd                 Configure SHDSL PSD Mask
   Margin              Configure SHDSL SNR Margin
>> Pair Mode           Configure SHDSL Pair Mode









--------------------------------------------------------------------------------
Command:Pair Mode <CR>
Message: Please input the following information.

SHDSL Wire Mode (TAB Select) <2 Pair>: 2 Pair_


--------------------------------------------------------------------------------
<I/K> Move up/down, <J/L> Exit/Enter, <U/O> Move top/bottom
```

When using 4-wires (2-pair) model, it will show Pair Mode item on here. User can select 1 Pair or 2 Pair for the DSL connection.

5.4.3. Configure E1 parameters

When using on E1 interface, select the **E1** item and press [ENTER] or [RIGHT].

```
   CH A                          SHDSL.BIS NTU
--------------------------------------------------------------------------------
   Interface          Configure NTU Interface
   Shdsl              Configure SHSDL Parameters
>> E1                 Configure E1 Parameters
   Serial             Configure Serial Parameters
   Rmtcfg             Enable/Disable Remote Config
   Default            Restore NTU's Default Setting









--------------------------------------------------------------------------------
Command:E1 <more...>
Message:



--------------------------------------------------------------------------------
<I/K> Move up/down, <J/L> Exit/Enter, <U/O> Move top/bottom
```

The E1 setting includes the Channel (frame mode), line code, AIS and build out settings.

Setup E1 Parameter, Channel

```
   CH A                          SHDSL.BIS NTU
--------------------------------------------------------------------------------
>> Channel            Configure E1 Channel
   Code               Configure E1 code
   Ais                Configure E1 AIS
   Build_outs         Configure E1 build outs









--------------------------------------------------------------------------------
Command:Channel <CR>
Message: Please input the following information.

Change E1 Channel (TAB Select) <PCM31>: PCM31


--------------------------------------------------------------------------------
<I/K> Move up/down, <J/L> Exit/Enter, <U/O> Move top/bottom
```

Framing is required to recover the channelised E1. In transparent operation, the framing is configured as Unframed. In this case the G.SHDSL framer must be set to Nx64 with N=32. For any framing such as FAS or CAS, the G.SHDSL framer must be set to E1, then the E1 framing here may be set accordingly.

Channel	Framing
PCM31	FAS
PCM31C	FAS+CRC4
PCM30	FAS+CAS
PCM30C	FAS+CAS+CRC4
FULL	Unframed

FAS — Frame Alignment Signal uses a 7-bits pattern to establish and maintain the frame synchronization. The FAS word is located in timeslot 0 of frame. In FAS mode there are 1~31 timeslot available for use data.

CAS — Also known as time slot 16 multi-framing. It requires a multi-framing alignment signal to be present for frame sync. The Multi-frame Alignment Signal (MFAS) is inserted into the 16th timeslot of frame 0 of the 16-frame multi-frame.
In CAS mode, there are 30 channels available for user data. If timeslot 16 is included in the unit's mapping, it will be disregarded.

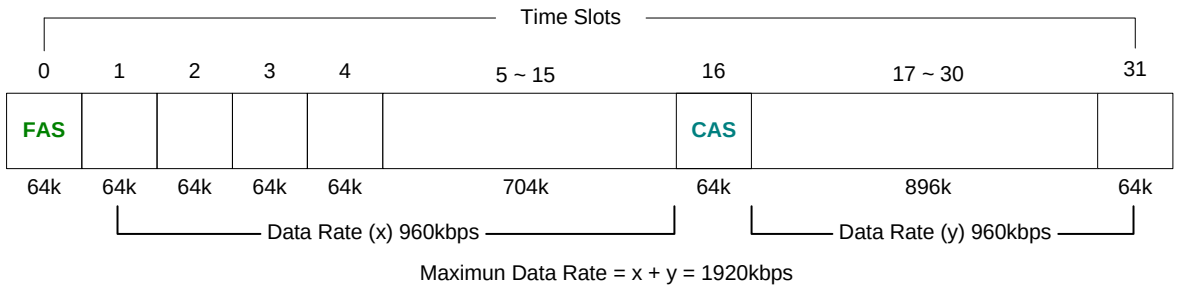

Maximun Data Rate = x + y = 1920kbps

CRC4 — The CRC-4 checksum bits are transmitted in the outgoing E1 data stream. Also the received signal is checked for errors.
CRC-4 checksum cannot be sent in unframed mode.

Unframed — In this mode, user data is inserted into all 32 channels (64k x 32 = 2048k) of the E1 stream. The object of running without framing is to utilize the full bandwidth of the E1 line.

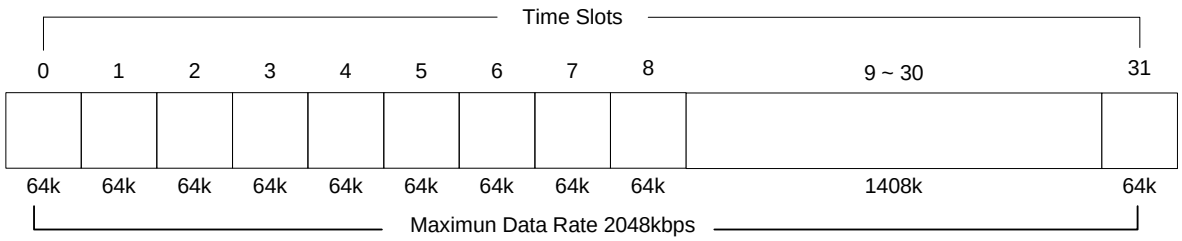

ITU 991.2 (2004) (G.SHDSL .Bis) supports data rate up to 5696Kbps, but G.703 (E1 standard) only supports data rate of 2048kbps so the maximum data rate of SHDSL line, connected with E1 DCEs, depends on data rate of E1, 2048kbps.

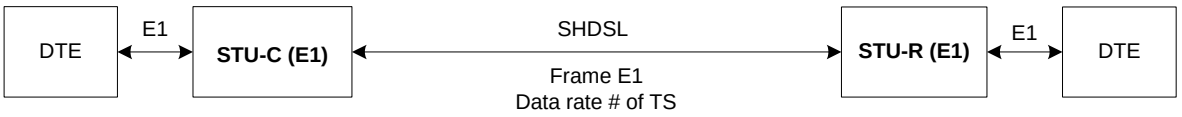

If the connection is E1 vs V.35 or V.35 vs E1, the frame has to be used N x 64k. In this case, the data rate depends on value of N. Same as above case, SHDSL and V35 can support up to 5696kbps data rate, but E1 supports maximum data rate of 2048kbps (32 x 64k).

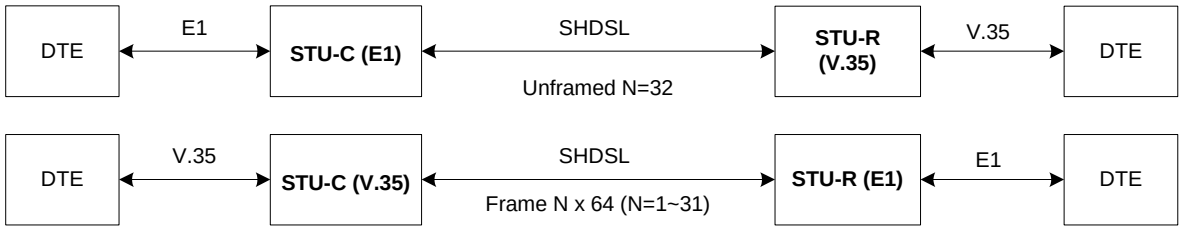

Time slots, N value, are placed in the frame. If time Slot Number is1 from 1~31 (N=1~31), it is Fractional E1. If time Slot Number is 32 (N=32), it is unframed.

Fractional E1

For fractional E1(FE1), the data rate is from 64k(N=1) to 1984k(N=31), according to the E1 framing. If the E1 frame is PCM31(FAS) or PCM31C(FAS+CRC4), there are 1~31 available time slot for use data. For example, if the data rate of SHDSL line set to be 512k, the time slot number is 8 and first time slot number is 1. The frame is shown as below.

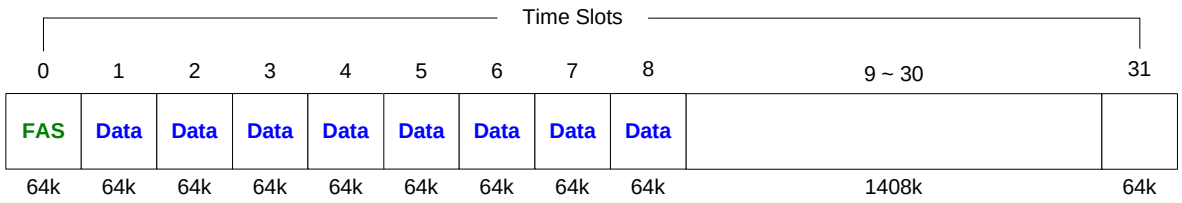

The First Time Slot setting of PCM31(FAS) and PCM31C(FAS+ CRC4) have to follow the rule:

First Time Slot ≦ 31 - Time Slot Number

Using the E1 framing of PCM30(FAS+CAS) or PCM30C(FAS+CAS+CRC4), the FAS will occupy Time Slot 0 and CAS Time Slot 16. There are only 30 Time Slot left for data. On the other hand, the data rate is 1920kbps.

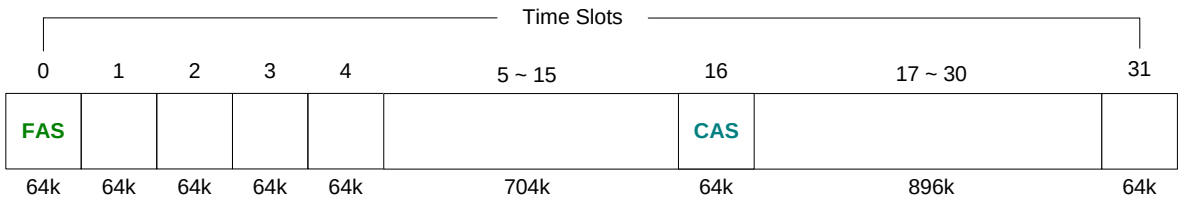

The First Time Slot setting of PCM30(FAS+CAS) and PCM30C(FAS+CAS+CRC4) have to follow the rule:

First Time Slot ≦ 30 - Time Slot Number

Unframed E1

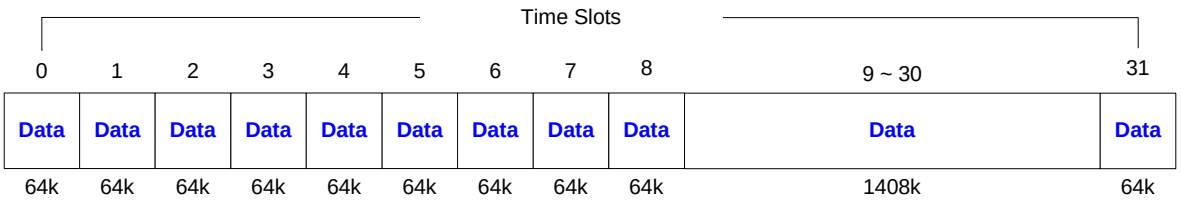

In Unframed E1, user data are inserted into all 32 channels (64k x 32 = 2048k) of the E1 stream. The object of running without framing is to utilize the full bandwidth of the E1 line.

Setup E1 Parameter, Pass Through

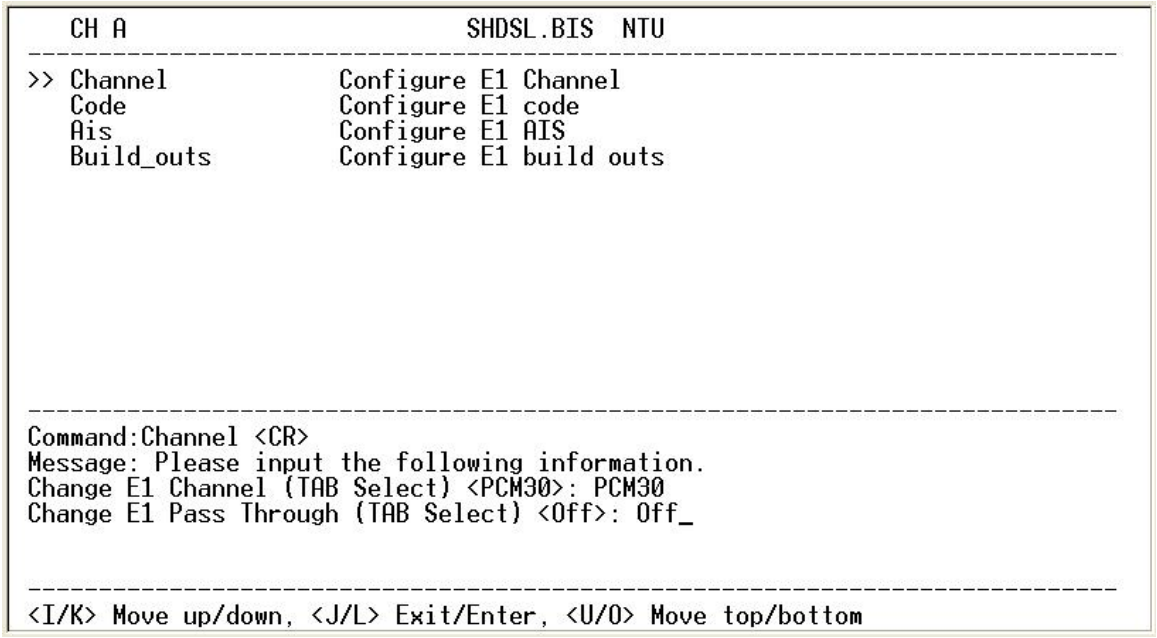

When set the E1 channel on PCM31C, PCM31, PCM30C and PCM30, there have E1 Pass Through selection item. You can set it Off or On for your application.

Note:

When SHDSL.bis using 2-pairs(4-wires), the time slot number can only use even number

When E1 framer is PCM31C and PCM30C and set pass through ON, no fractional function can be use.

Table of Pass through function with user data rate vs. DSL line rate (for 2-wires)

				Pass Through : On	Pass Through : Off
Channel	Time Slot number	1st Time Slot	User data rate	DSL line rate	DSL line rate
PCM31/PCM31C	31	1	31	32	31
PCM30/PCM30C	30	1	30	32	30
PCM31/PCM31C	30	1	30	32	30
PCM30/PCM30C	29	1	29	32	29
PCM31/PCM31C	29	1	29	30	29
PCM30/PCM30C	28	1	28	30	28
PCM31/PCM31C	28	1	28	29	28
PCM30/PCM30C	27	1	27	29	27
PCM31/PCM31C	27	1	27	28	27
PCM30/PCM30C	26	1	26	28	26
PCM31/PCM31C	26	1	26	27	26
PCM30/PCM30C	25	1	25	27	25
PCM31/PCM31C	25	1	25	26	25
PCM30/PCM30C	24	1	24	26	24
◦ ◦	◦ ◦	◦ ◦	◦ ◦	◦ ◦	◦ ◦
PCM31/PCM31C	15	10	15	16	15
PCM30/PCM30C	14	10	14	16	14
PCM31/PCM31C	14	5	14	15	14
PCM30/PCM30C	13	5	13	15	13
◦	◦	◦	◦	◦	◦
PCM31/PCM31C	10	5	10	11	10
PCM30/PCM30C	9	5	9	11	9
◦	◦	◦	◦	◦	◦
PCM31/PCM31C	4	1	4	5	4
PCM30/PCM30C	3	1	3	5	3
PCM31/PCM31C	3	1	3	4	3
PCM30/PCM30C	2	1	2	4	3
PCM31/PCM31C	2	1	2	3	3
PCM30/PCM30C	1	1	1	3	3
PCM31/PCM31C	1	1	1	3	3

For example, use channel as PCM30 or PCM30C (with time slot number is 30 and first time slot is 1) as following show. When Pass Through set Off, the DSL transfer data is not include the time slot of FAS and CAS. The information of FAS and CAS on remote is made by method of re-creation.

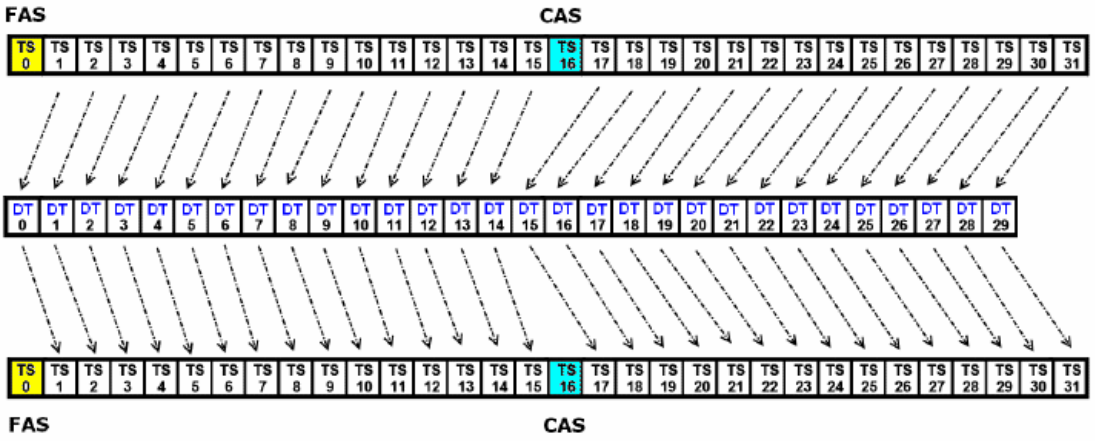

Setup E1 Parameter, Line Code

```
   CH A                          SHDSL.BIS NTU
--------------------------------------------------------------------------------
   Channel              Configure E1 Channel
>> Code                 Configure E1 code
   Ais                  Configure E1 AIS
   Build_outs           Configure E1 build outs









--------------------------------------------------------------------------------
Command:Code <CR>
Message: Please input the following information.

Change E1 Line Code (TAB Select) <HDB3>: HDB3_


--------------------------------------------------------------------------------
<I/K> Move up/down, <J/L> Exit/Enter, <U/O> Move top/bottom
```

The G.SHDSL .Bis NTU supports two different line code. HDB3 is the most popular and preferred line coding and is also the default setting. AMI line coding is also selectable.

`

HDB3	In this line coding, the transmitter substitutes a deliberate bipolar violation when excessive zeros in the data stream are detected. The receiver recognizes these special violations and decodes them as zeros. This method enables the network to minimize pulse density requirements. Unless AMI is required for your application, HDB3 should be used whenever possible.
AMI	Alternate Mark Inversion defines a pulse as a “mark,” a binary one, as opposed to a zero. In an E1 network connection, signals are transmitted as a sequence of one and zero. One is sent as pulse, and zero is sent as spaces, i.e. no pulse. Every other pulse is inverted from the previous pulse in polarity, so that the signal can be effectively transmitted. This means, however, that a long sequence of zeros in data stream will cause problems, since the NTU receiving the signal relies on the signal to recover the 2048kbps clock.

Setup E1 Parameter, AIS

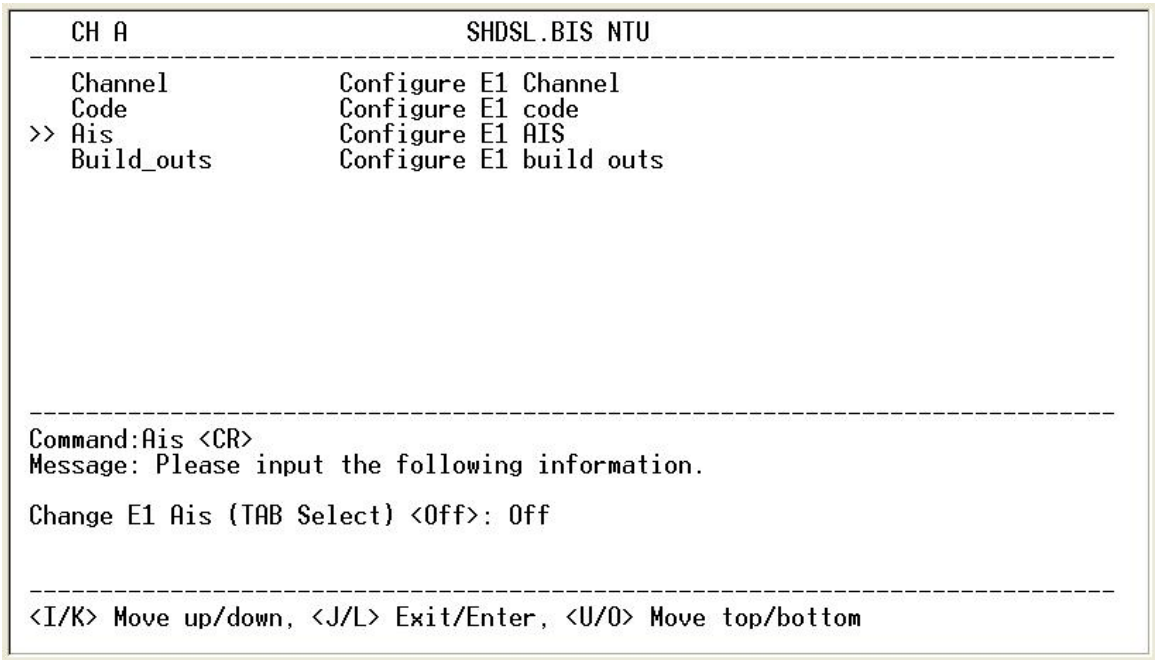

AIS (Alarm Indication Signal) is a method to inform the remote connection that there is a signal or sync problem with the E1. AIS is only valid in framed mode E1, not in Unframed E1. The setting here of AIS enabled (on) or not (off) and is for testing with AIS. When enabled, the E1 will transmit the AIS and it should be confirmed at the remote device (AIS indication lit). After testing, please turn AIS back off.

- Example 1: When STU-R E1 RX line is dropped, STU-R sends the status to STU-C via EOC or command, and then

STU-C will send AIS (Alarm Indication Signal) to DTE while AIS function is enabled.

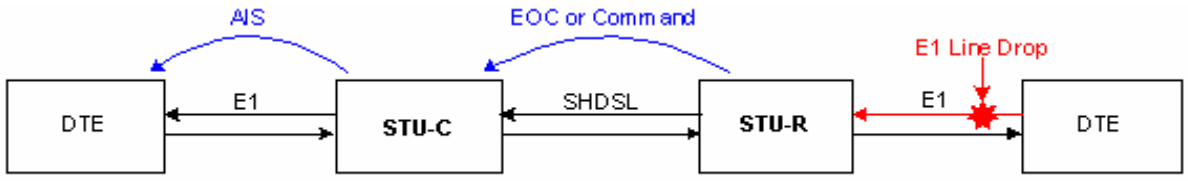

- Example 2: When SHDSL connection drops, STU-R and STU-C both send AIS (Alarm Indication Signal) to DTE in the same time while AIS function is enabled.

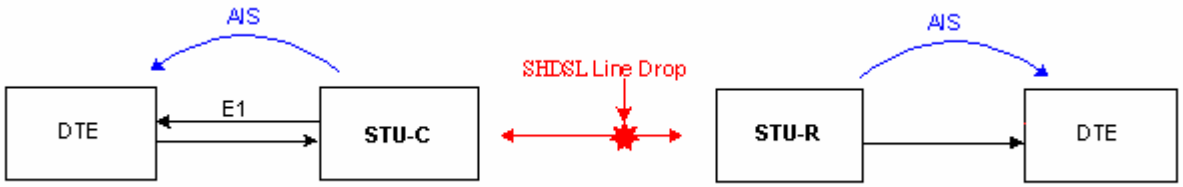

Setup E1 Parameter, Build Out

```
   CH A                          SHDSL.BIS NTU
--------------------------------------------------------------------------------
   Channel              Configure E1 Channel
   Code                 Configure E1 code
   Ais                  Configure E1 AIS
>> Build_outs           Configure E1 build outs









--------------------------------------------------------------------------------
Command:Build_outs <CR>
Message: Please input the following information.

Change E1 Build Outs (TAB Select) <120 Ohm>: 120 Ohm_


--------------------------------------------------------------------------------
<I/K> Move up/down, <J/L> Exit/Enter, <U/O> Move top/bottom
```

The SHDSL.Bis NTU can support both unbalanced E1 at 75 ohms (BNC) and balanced E1 at 120 ohms (RJ-48C). The settings for impedance are made here under the build out menu setting.

5.4.4. Configure Serial parameters

When using the Serial interface, select the Serial item and press [ENTER] or [RIGHT].

The serial settings include the data rate, clocking and handshaking lines setup.

Setup Serial Parameter, Interface

```
   CH A                          SHDSL.BIS NTU
--------------------------------------------------------------------------------
>> Interface          Configure Serial Interface
   Data rate          Configure Serial Data Rate (N*64)
   Clock              Configure Serial clock
   Rts                Configure Serial rts
   Cts                Configure Serial cts
   Dsr                Configure Serial dsr
   Dcd                Configure Serial dcd
   Delay              Configure Serial delay




--------------------------------------------------------------------------------
Command:Interface <CR>
Message: Please input the following information.

Change V.35 Interface (TAB Select) <V35>: V35_


--------------------------------------------------------------------------------
<I/K> Move up/down, <J/L> Exit/Enter, <U/O> Move top/bottom
```

There are two interfaces : V.35 and X.21.

Setup Serial Parameter, Data Rate - Rate type

```
   CH A                          SHDSL.BIS  NTU
--------------------------------------------------------------------------------
   Interface          Configure Serial Interface
>> Data rate          Configure Serial Data Rate (N*64)
   Clock              Configure Serial clock
   Data               Configure Serial data
   Rts                Configure Serial rts
   Cts                Configure Serial cts
   Dsr                Configure Serial dsr
   Dcd                Configure Serial dcd
   Delay              Configure Serial delay




--------------------------------------------------------------------------------
Command:Data rate <CR>
Message: Please input the following information.

rate Type (TAB Select) <N64>: N64_


--------------------------------------------------------------------------------
<I/K> Move up/down, <J/L> Exit/Enter, <U/O> Move top/bottom
```

There are two modes: Nx64K model and T1 mode. When other side as T1 interface and unframed mode connect to this side as Serial interface, we must set Serial rate mode as T1 mode.

Setup Serial Parameter, Data Rate

```
   CH A                          SHDSL.BIS NTU
--------------------------------------------------------------------------------
   Interface          Configure Serial Interface
>> Data rate          Configure Serial Data Rate (N*64)
   Clock              Configure Serial clock
   Rts                Configure Serial rts
   Cts                Configure Serial cts
   Dsr                Configure Serial dsr
   Dcd                Configure Serial dcd
   Delay              Configure Serial delay




--------------------------------------------------------------------------------
Command:Data rate <CR>
Message: Please input the following information.

Change Serial Nx64 (TAB Select) <32>: 32


--------------------------------------------------------------------------------
<I/K> Move up/down, <J/L> Exit/Enter, <U/O> Move top/bottom
```

For 2-wires with Annex A and B, the rate can be adjusted in increments of 64kbps from 64kbps to 2304kbps (N=1~36).

For 2-wires with Annex F and G, the rate can be adjusted in increments of 64kbps from 64kbps to 5696kbps (N=1~89).

For 4-wires with Annex A and B, the rate can be adjusted in increments of 64kbps from 128kbps to 4608kbps (N=2~72 , even number only).

For 4-wires with Annex F and G, the rate can be adjusted in increments of 64kbps from 128kbps to 8192kbps (N=2~128, even number only).

Setup Serial Parameter, Clock Polarity

```
   CH A                          SHDSL.BIS NTU
--------------------------------------------------------------------------------
   Interface          Configure Serial Interface
   Data rate          Configure Serial Data Rate (N*64)
>> Clock              Configure Serial clock
   Rts                Configure Serial rts
   Cts                Configure Serial cts
   Dsr                Configure Serial dsr
   Dcd                Configure Serial dcd
   Delay              Configure Serial delay




--------------------------------------------------------------------------------
Command:Clock <CR>
Message: Please input the following information.

Change Serial Clock (TAB Select) <normal>: normal


--------------------------------------------------------------------------------
<I/K> Move up/down, <J/L> Exit/Enter, <U/O> Move top/bottom
```

The data port clock polarity may be adjusted to solve some rare clocking issues. The default setting is 'Normal' clock polarity, where data is sent on the negative transition of the clock, while the option exists to set inverse clock polarity where data is sent on the positive clock transition.

Setup Serial Parameter, RTS

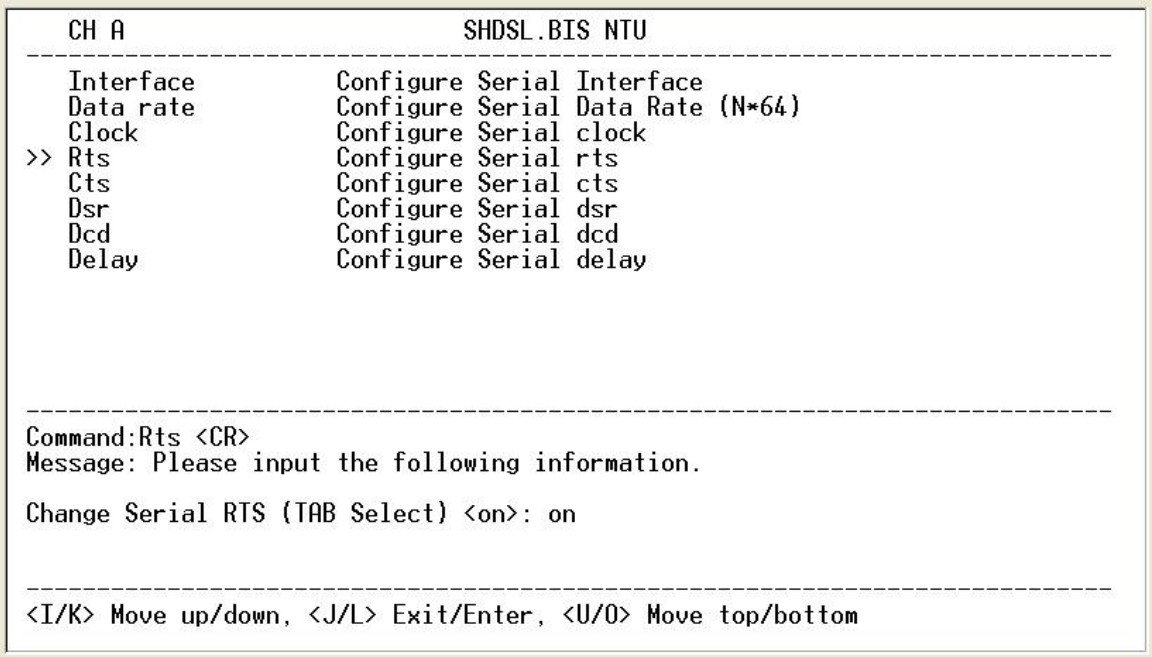

The behavior of the RTS (Request To Send) signal may be set in one of two ways. When set 'on', the RTS signal is always forced on (active low), when set 'from DTE' the RTS signal will follow the DTE's condition. The default setting for RTS is on.

Setup Serial Parameter, CTS

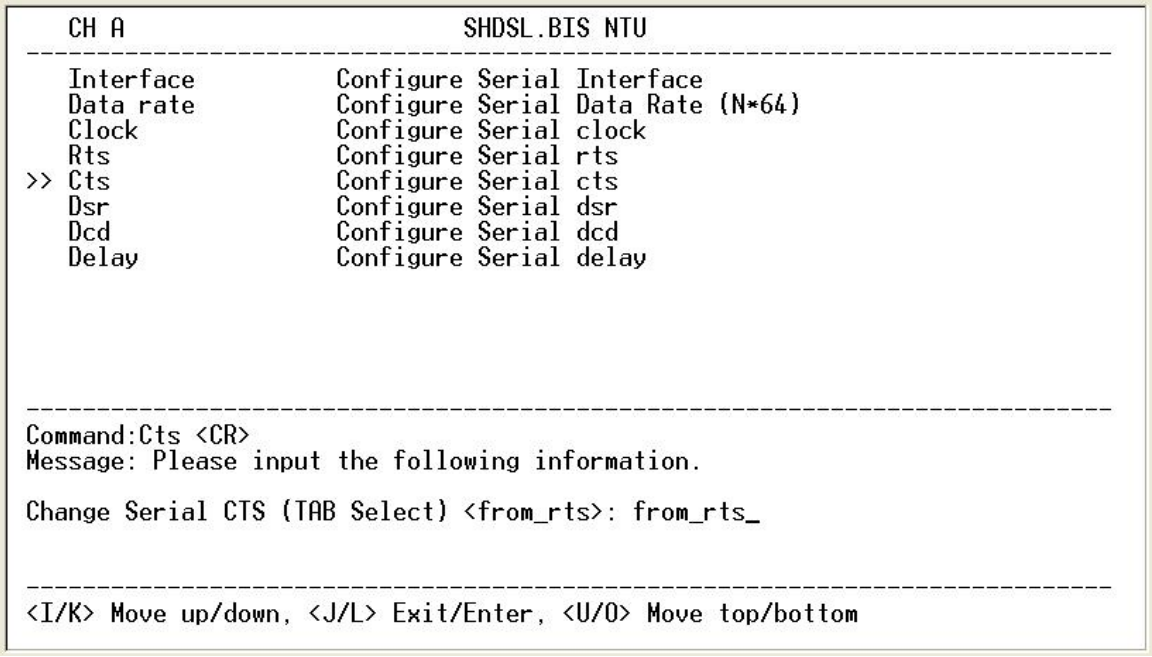

The behavior of the CTS (Clear To Send) signal may be set in one of three ways. When set 'on', the CTS signal is always forced on (active low), when set 'off' the signal is always forced off, or CTS will follow RTS (Request To Send) condition of 'on' for RTS on 'off' for RTS off. The default setting for CTS is to follow RTS.

Setup Serial Parameter, DSR

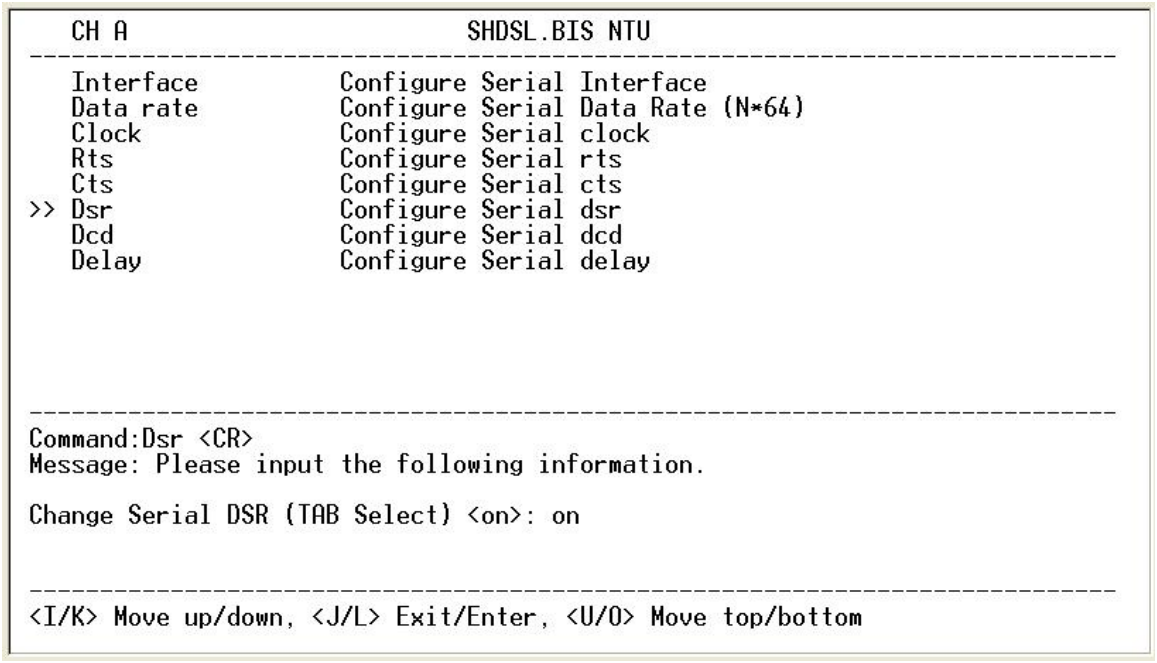

The behavior of the DSR (Data Set Ready) signal may be set in one of three ways. When set 'on', the DSR signal is always forced on (active low), when set 'off' the signal is always forced off or DSR will follow DTR (Data Terminal Ready) condition of 'on' for DTR on or 'off' for DTR off. The default setting for DSR is on.

Setup Serial Parameter, DCD

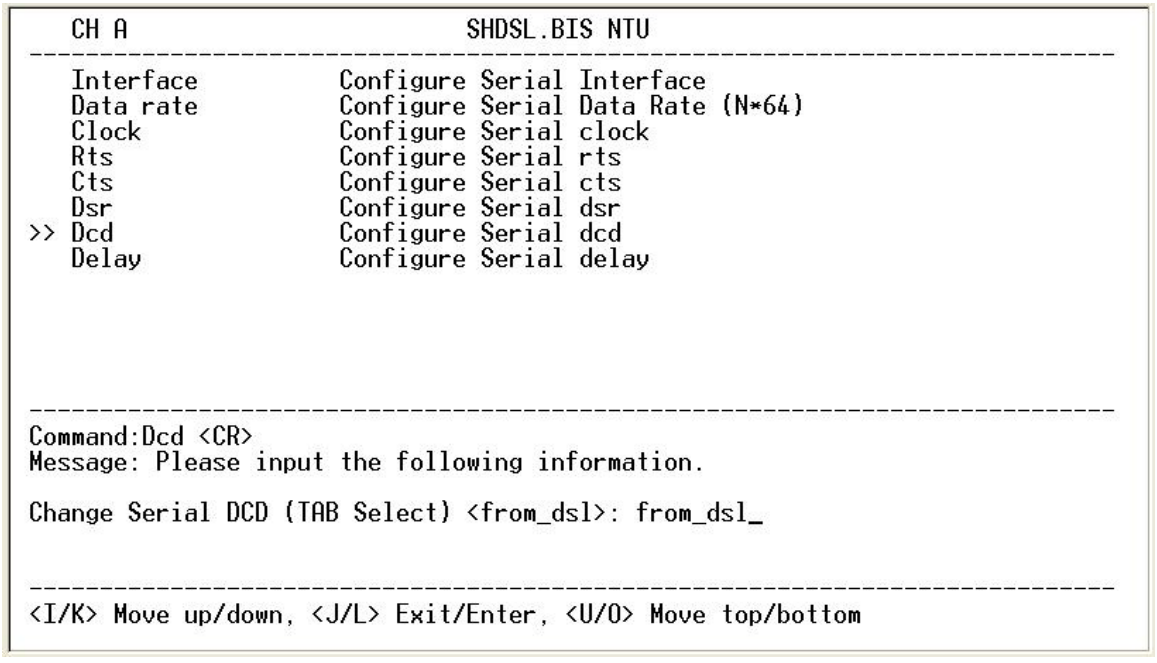

The behavior of the DCD (Data Carrier Detect) signal may be set in one of three ways. When set 'on', the DCD signal is always forced on (active low), when set 'off' the signal is always forced off, or DCD will follow the DSL condition of 'on' for DSL link or 'off' for no link. The default setting for DCD is to follow the DSL link status.

Setup Serial Parameter, Delay

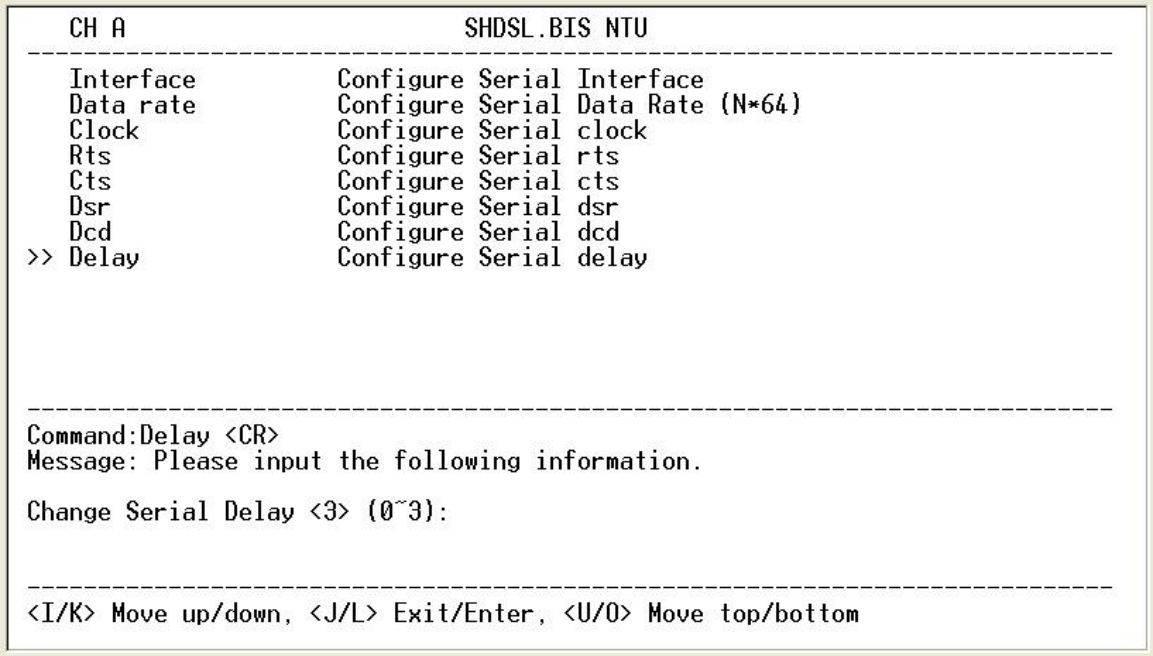

The delay setting is used to cause a delay for CTS to follow RTS. The delay setting may be set 0, 1, 2 or 3 milliseconds. The default setting is 3 milliseconds.

It works only for the setting: *CTS follow RTS* and *RTS follow from DTE* .

5.4.5. Configure Ethernet parameter

When using the Ethernet interface mode, select the Ethernet item and press [ENTER] or [RIGHT].

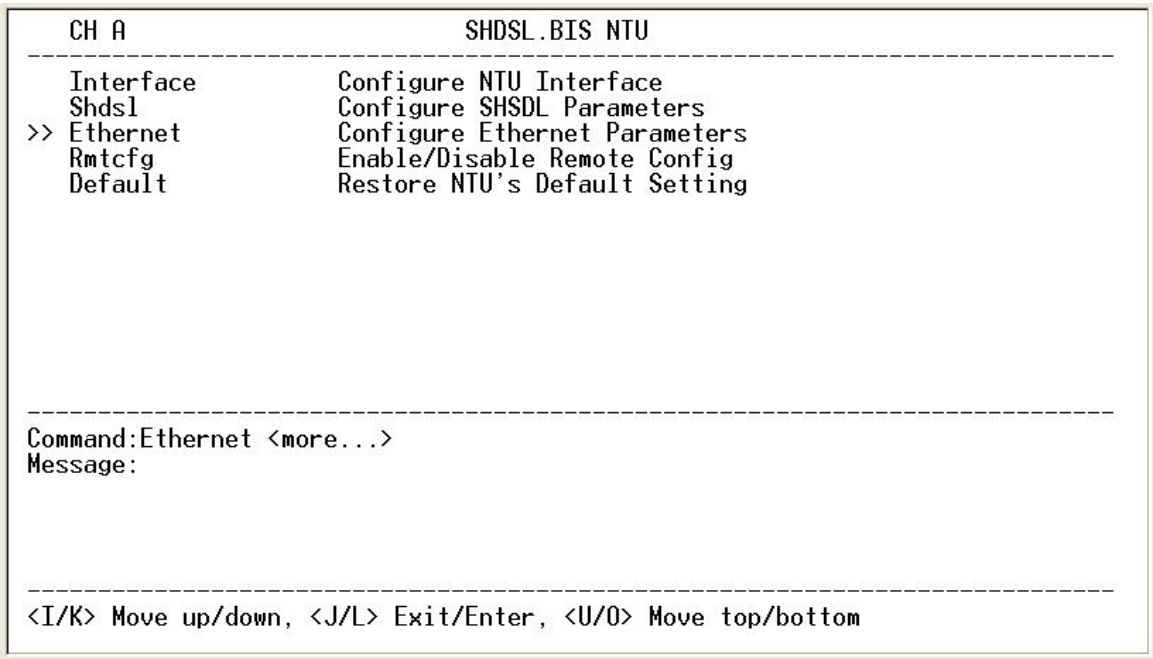

The Ethernet settings include the data rate, negotiation, duplex the speed.

Setup Ethernet Parameter, Data Rate – Rate type

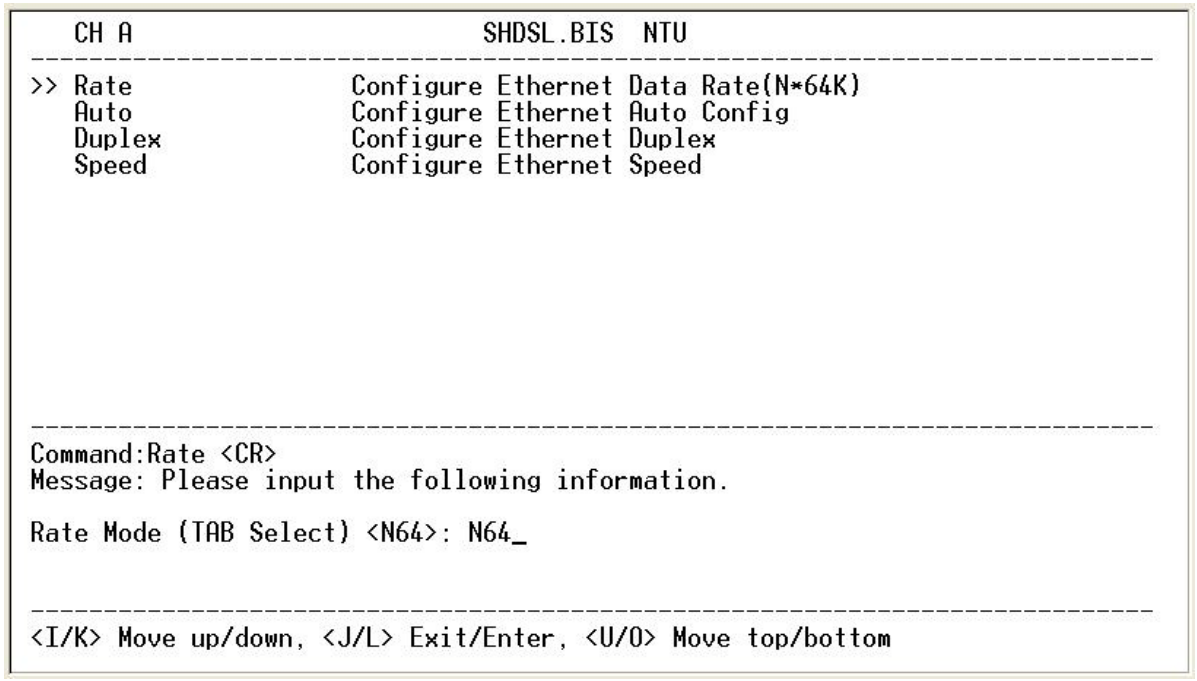

There are two modes: Nx64K model and T1 mode. When other side as T1 interface and unframed mode connect to this side as Ethernet interface, we must set Ethernet rate mode as T1 mode.

Setup Ethernet Parameter, Data Rate

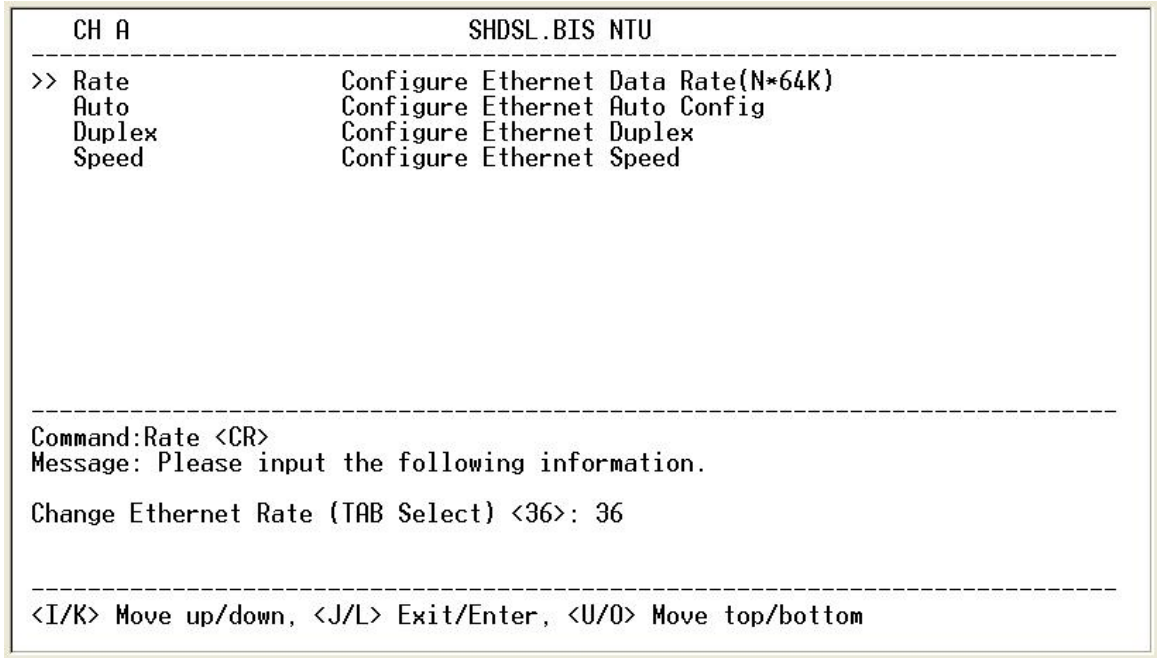

For 2-wires with Annex A and B, the rate can be adjusted in increments of 64kbps from 64kbps to 2304kbps (N=1~36).

For 2-wires with Annex F and G, the rate can be adjusted in increments of 64kbps from 64kbps to 5696kbps (N=1~89).

For 4-wires with Annex A and B, the rate can be adjusted in increments of 64kbps from 128kbps to 4608kbps (N=2~72, even number only).

For 4-wires with Annex F and G, the rate can be adjusted in increments of 64kbps from 128kbps to 11392kbps (N=2~178, even number only).

Setup Interface Parameter, Negotiation

```
   CH A                          SHDSL.BIS NTU
--------------------------------------------------------------------------------
   Rate                Configure Ethernet Data Rate(N*64K)
>> Auto                Configure Ethernet Auto Config
   Duplex              Configure Ethernet Duplex
   Speed               Configure Ethernet Speed









--------------------------------------------------------------------------------
Command:Auto <CR>
Message: Please input the following information.

Change Ethernet Auto Config  (TAB Select) <Enable>: Enable


--------------------------------------------------------------------------------
<I/K> Move up/down, <J/L> Exit/Enter, <U/O> Move top/bottom
```

You can select Enable and Disable on auto negotiation function.

Setup Ethernet Parameter, Duplex

```
   CH A                          SHDSL.BIS NTU
--------------------------------------------------------------------------------
   Rate                Configure Ethernet Data Rate(N*64K)
   Auto                Configure Ethernet Auto Config
>> Duplex              Configure Ethernet Duplex
   Speed               Configure Ethernet Speed









--------------------------------------------------------------------------------
Command:Duplex <CR>
Message: Please input the following information.

Change Ethernet Duplex  (TAB Select) <Full-Duplex>: Full-Duplex


--------------------------------------------------------------------------------
<I/K> Move up/down, <J/L> Exit/Enter, <U/O> Move top/bottom
```

When auto negotiation setup is **disable**, there has to be a selection of duplex mode: **Full-Duplex** and **Half-Duplex**.

Setup Ethernet Parameter, Speed

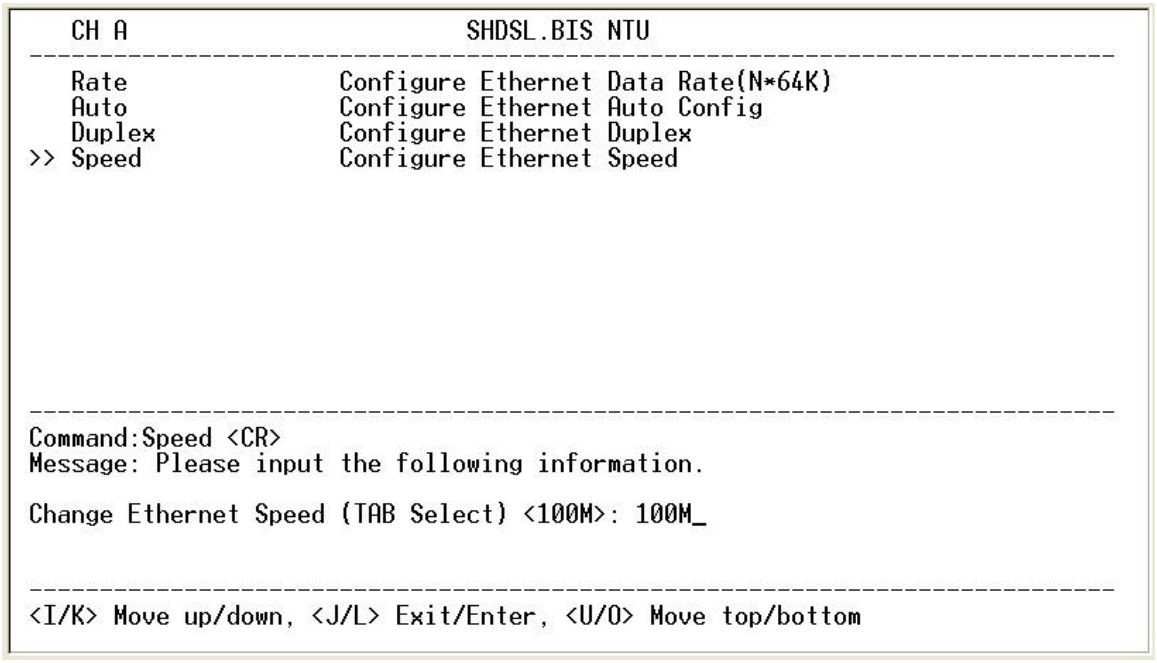

When auto negotiation is **Disable**, there has to be selection on speed setting: **10M** and **100M**.If auto negotiation is **Enable**, the items **Duplex** and **Speed** cannot be set. The message will display “Ethernet is in auto negotiate”.

5.4.6. Configure T1 parameter

When using the T1 interface mode, select the T1 item and press [ENTER] or [RIGHT].

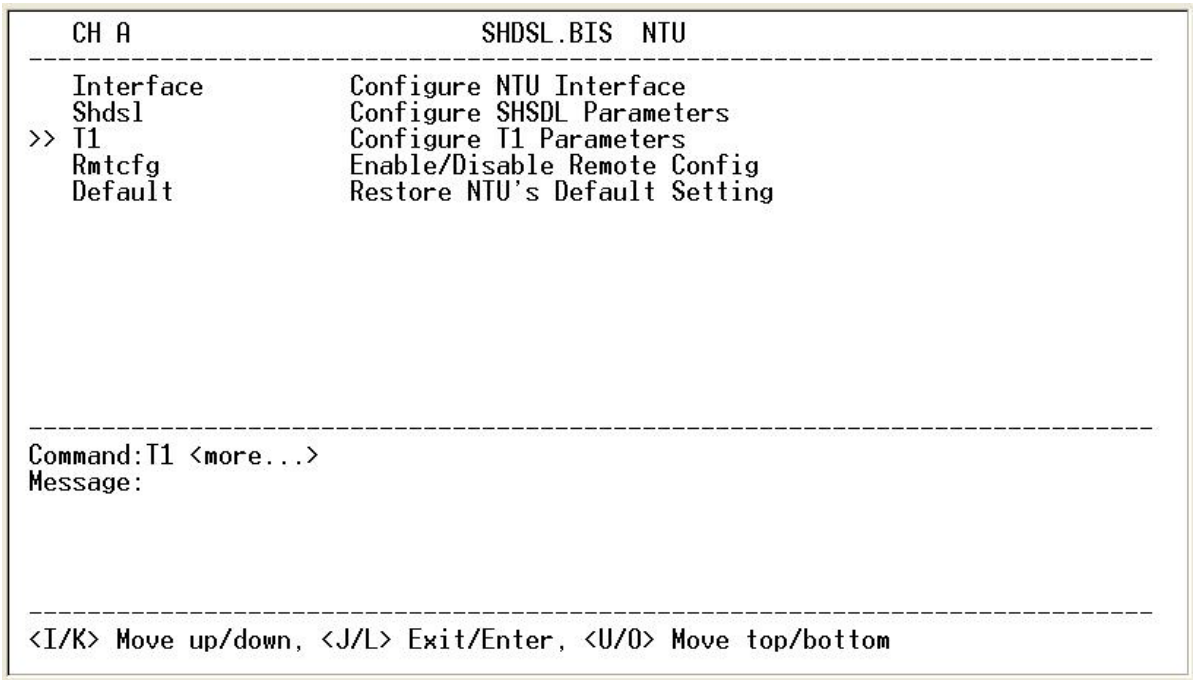

The T1 settings include the Channel, Number of time slots , First time slots, LBO and AIS.

Setup Ethernet Parameter, Channel

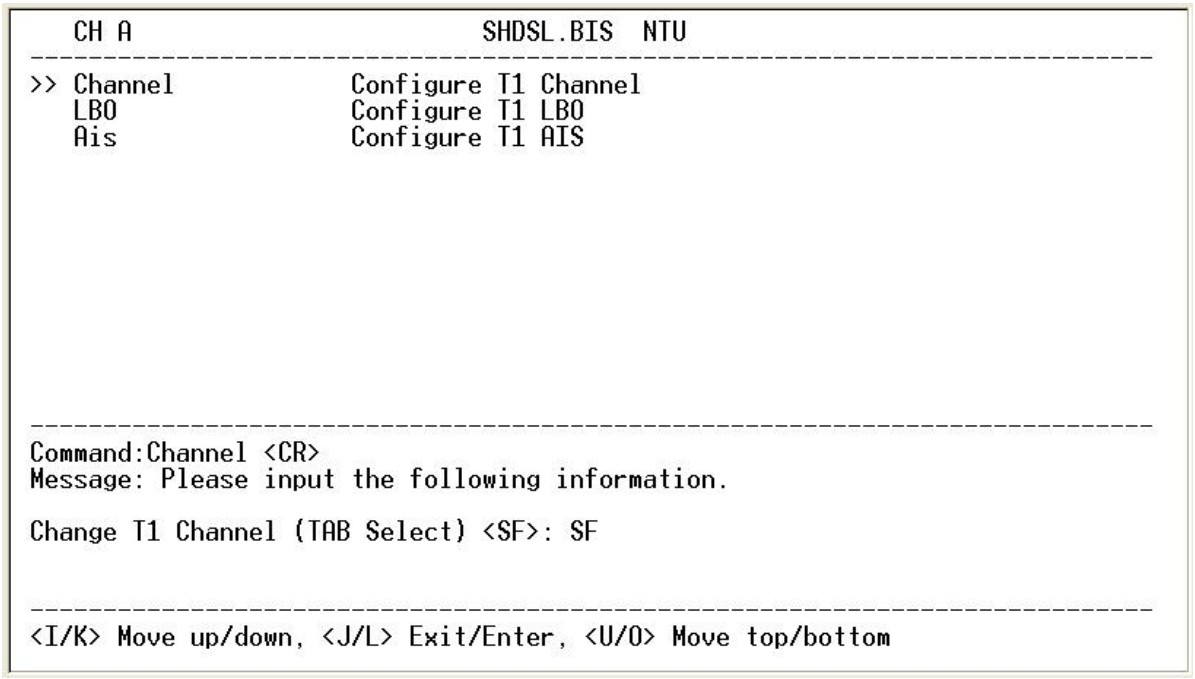

The T1 interface can be programmed to encode/decode its transmit/receive signals using Bipolar with Eight Zero Suppression (**B8ZS**) coding.

Each T1 frame contains 1 byte of voice data for each of the 24 channels, that system needs then 8000 frames per second to maintain those 24 simultaneous voice channels. Because each frame of a T1 is 193 bits in length (24 channels X 8 bits per channel + 1 framing bit = 193 bits), 8000 frames per second is multiplied by 193 bits to yield a transfer rate of 1.544 Mbit/s (8000 X 193 = 1544000).

The T1 format provides a 64 Kbps channel for each of 24 individual channels. Each of these channels is called a DS-0 channel or a time slot and consists of an eight-bit sample. A T1 frame is constructed by time division multiplexing these 24 time slots and inserting a framing bit at the beginning of the series. This results in 192 bits of channel data, plus a framing bit (F-bit), for a total of 193 bits in a frame. Multiple frames are then grouped into superframes of 12 or 24 frames to provide for framing synchronization and signaling.

The Superframe(**SF**) (also called D4 or **193S**) format defines a superframe as 12 frames.
The Extended Superframe (**ESF**) (also called **193E**) format groups 24 frames into its superframe.
Both the SF and ESF framing formats provide an actual payload data rate of 1.536 Mbps (192/193 = 1.536/1.544).

Setup T1 Parameter, Time Slot number and First time slot

```
   CH A                          SHDSL.BIS  NTU
--------------------------------------------------------------------------------
>> Channel            Configure T1 Channel
   LBO                Configure T1 LBO
   Ais                Configure T1 AIS









--------------------------------------------------------------------------------
Command:Channel <CR>
Message: Please input the following information.

Change T1 Channel (TAB Select) <SF>: SF
Set Number of Time Slots (TAB Select) <12>: 12
Change N64Framer 1st Slot <1> (1~12): 1
--------------------------------------------------------------------------------
<I/K> Move up/down, <J/L> Exit/Enter, <U/O> Move top/bottom
```

For fractional T1 , the data rate is from 64k(N=1) to 1536k(N=24), according to the T1 framing.

When SHDSL.bis using 2-pairs(4-wires), the time slot number can only use even number

Setup T1 Parameter, Channel use Unframed mode

```
   CH A                          SHDSL.BIS  NTU
--------------------------------------------------------------------------------
>> Channel            Configure T1 Channel
   LBO                Configure T1 LBO
   Ais                Configure T1 AIS









--------------------------------------------------------------------------------
Command:Channel <CR>
Message: Please input the following information.

Change T1 Channel (TAB Select) <UNFRAMED>: UNFRAMED_


--------------------------------------------------------------------------------
<I/K> Move up/down, <J/L> Exit/Enter, <U/O> Move top/bottom
```

Unframed: All transmitted bits are used as data bits. This selection must be used when the clock rate of the remote unit is set at 1.544 Mbps.

The table of number of time slot vs. 1st time slot:

Channel	Number of slot	1st slot
SF	24	1
ESF	23	1~2
	22	1~3
	21	1~4
	20	1~5
	19	1~6
	18	1~7
	17	1~8
	16	1~9
	15	1~10
	14	1~11
	13	1~12
	12	1~13
	11	1~14
	10	1~15
	9	1~16
	8	1~17
	7	1~18
	6	1~19
	5	1~20
	4	1~21
	3	1~22
	2	1~23
	1	1~24

Setup T1 Parameter, LBO

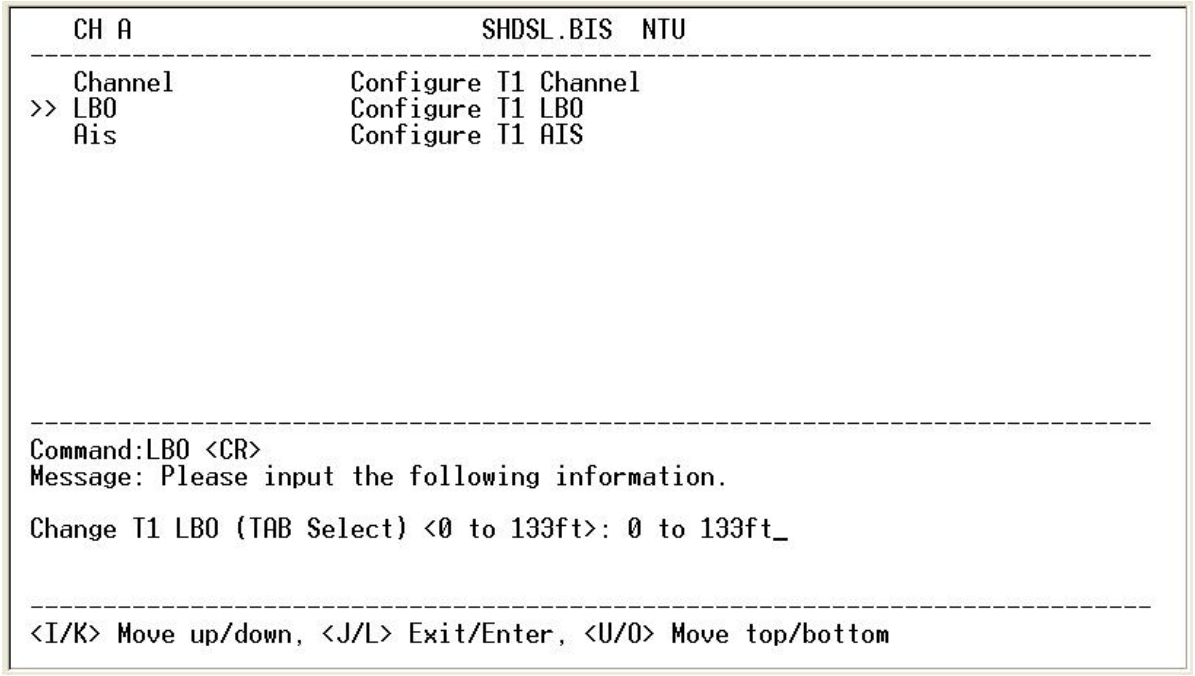

LBO(Line build-out) setting are an inherent part of T1 network element transmission circuitry. Because cable lengths between T1 device and NTU are vary, LBO settings are designed to adjust the output power of the transmission signal to achieve equal level point (ELP) at the NTU.

For short distance of T1 cable, this device must decreases outgoing signal strength.

There are five type T1 LBO for your select : 0 ~133ft , 133 ~ 266ft , 266 ~399 ft , 399 ft ~ 533ft , 533ft ~ 655ft

Setup T1 Parameter, AIS

```
   CH A                          SHDSL.BIS  NTU
--------------------------------------------------------------------------------
   Channel             Configure T1 Channel
   LBO                 Configure T1 LBO
>> Ais                 Configure T1 AIS









--------------------------------------------------------------------------------
Command:Ais <CR>
Message: Please input the following information.

Change T1 Ais (TAB Select) <Off>: Off_


--------------------------------------------------------------------------------
<I/K> Move up/down, <J/L> Exit/Enter, <U/O> Move top/bottom
```

AIS (Alarm Indication Signal) is a method to inform the remote connection that there is a signal or sync problem with the T1.

5.4.7. Remote configuration

You can set the “Enable/Disable function” to let the remote side configure parameters to this device remotely.

```
   CH A                          SHDSL.BIS NTU
--------------------------------------------------------------------------------
   Interface           Configure NTU Interface
   Shdsl               Configure SHSDL Parameters
   Ethernet            Configure Ethernet Parameters
>> Rmtcfg              Enable/Disable Remote Config
   Default             Restore NTU's Default Setting









--------------------------------------------------------------------------------
Command:Rmtcfg <CR>
Message: Please input the following information.

Rmtcfg  (TAB Select) <Enable>: Enable_


--------------------------------------------------------------------------------
<I/K> Move up/down, <J/L> Exit/Enter, <U/O> Move top/bottom
```

5.4.8. Restore factory default

The G.SHDSL .Bis NTU can restore all settings to the original factory settings simply by going to the setting menu, selecting the Default item, and then press ENTER. The system will ask for a y(es) or n(o) confirmation followed by an ENTER.

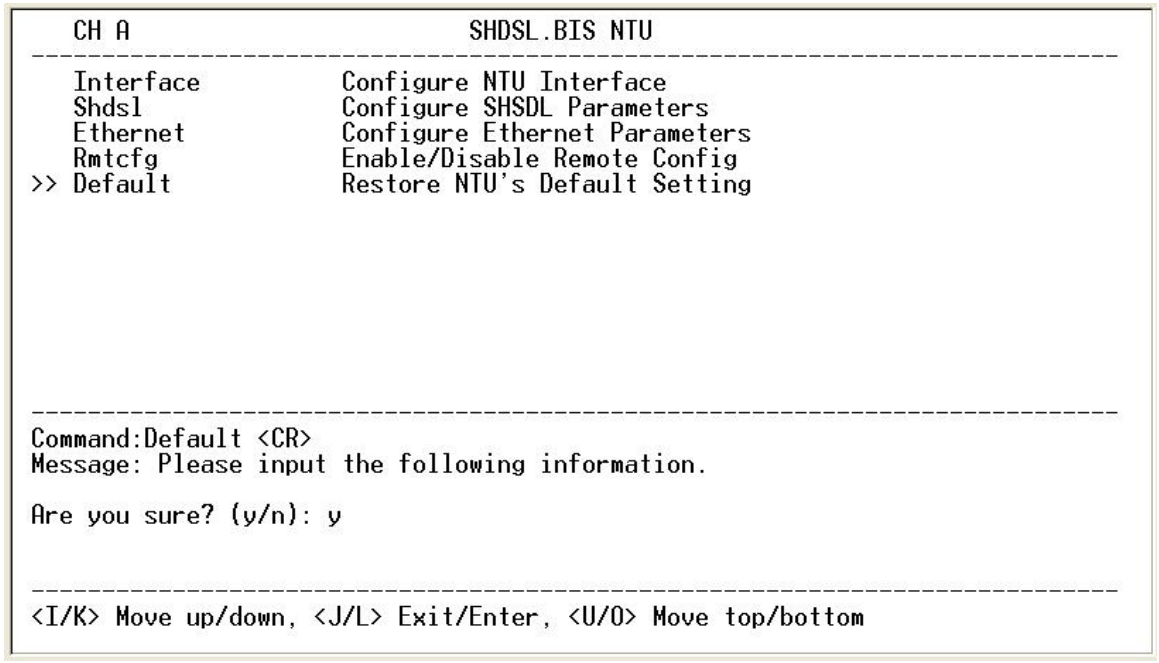

The default vaules are as the following:

Interface	Setup Parameter	Default value
SHDSL	setup Interface	E1 *Notes 1*
	setup Shdsl Mode	STU-R
	setup Shdsl Annex	Annex-G
	setup Shdsl Psd	SYM
	setup Shdsl Startup Margin	0
	setup Shdsl Pair Mode	1 Pair *Notes 2*
E1	setup E1 Channel	PCM31C
	setup Pass Through	Off
	setup E1 Slot Number	31
	setup E1 First Slot	1
	setup E1 code	HDB3
	setup E1 AIS	Off
	setup E1 Build Outs	120 Ohm

Serial	setup Serial Interface	V35
	setup Serial Data Rate Type	Nx64K
	setup Serial Data Rate	32
	setup Serial Clock	normal
	setup Serial Rts	on
	setup Serial Cts	from_rts
	setup Serial Dsr	on
	setup Serial Dcd	from_dsl
	setup Serial Delay	3
Ethernet	Setup Ethernet Rate Type	Nx64K
	Setup Ethernet Rate	36
	setup Ethernet Auto Config	Enable
	setup Ethernet Speed	Auto negotiate
	setup Ethernet Duplex	Auto negotiate
E1+ Serial	setup E1 Channel	PCM31C
	setup E1 Slot Number	31
	setup E1 First Slot	1
	setup E1 code	HDB3
	setup E1 AIS	Off
	setup E1 Build Outs	120 Ohm
	setup Serial Interface	V35
	setup Serial Data Rate Type	Nx64K
	setup Serial Data Rate	32
	setup Serial Clock	normal
	setup Serial Rts	on
	setup Serial Cts	from_rts
	setup Serial Dsr	on
	setup Serial Dcd	from_dsl
	setup Serial Delay	3
E1+Ethernet	setup E1 Channel	PCM31C
	setup E1 Slot Number	31
	setup E1 First Slot	1
	setup E1 code	HDB3
	setup E1 AIS	Off
	setup E1 Build Outs	120 Ohm
	Setup Ethernet Rate Type	Nx64K
	Setup Ethernet Rate	36
	setup Ethernet Auto Config	Enable
	setup Ethernet Speed	Auto negotiate
	setup Ethernet Duplex	Auto negotiate

T1	setup T1 Channel	SF
	setup T1 Slot Number	24
	setup T1 First Slot	1
	setup T1 AIS	off
	setup T1 Lbo	0 to 133ft
T1+ Serial	setup T1 Channel	SF
	setup T1 Slot Number	24
	setup T1 First Slot	1
	setup T1 AIS	Off
	setup T1 Lbo	0 to 133ft
	setup Serial Interface	V35
	setup Serial Data Rate Type	Nx64K
	setup Serial Data Rate	32
	setup Serial Clock	normal
	setup Serial Rts	on
	setup Serial Cts	from_rts
	setup Serial Dsr	on
	setup Serial Dcd	from_dsl
	setup Serial Delay	3
T1+ Ethernet	setup T1 Channel	SF
	setup T1 Slot Number	24
	setup T1 First Slot	1
	setup T1 AIS	Off
	setup T1 Lbo	0 to 133ft
	setup Ethernet Rate Type	Nx64K
	setup Ethernet Rate	36
	setup Ethernet Auto Config	Enable
	setup Ethernet Speed	100M
	setup Ethernet Duplex	Full-Duplex

Notes1 For Multi-interface model only (UM-SNB/703, UM-SNB/703/4w, UM-SNB/3in1, UM-SNB/3in1/4w, UM-SNB/4in1 and UM-SNB/4in1/4w)

Notes 2 For 2 pairs (4-wires) model only (UM-SNB/E1/4w, UM-SNB/35/4w, UM-SNB/L/4w, UM-SNB/3in1/4w, UM-SNB/703/4w and UM-SNB/4in1/4w)

5.5 Reboot

In main menu, move the cursor to **reboot** and press [ENTER]. The device will reboot after confirming.

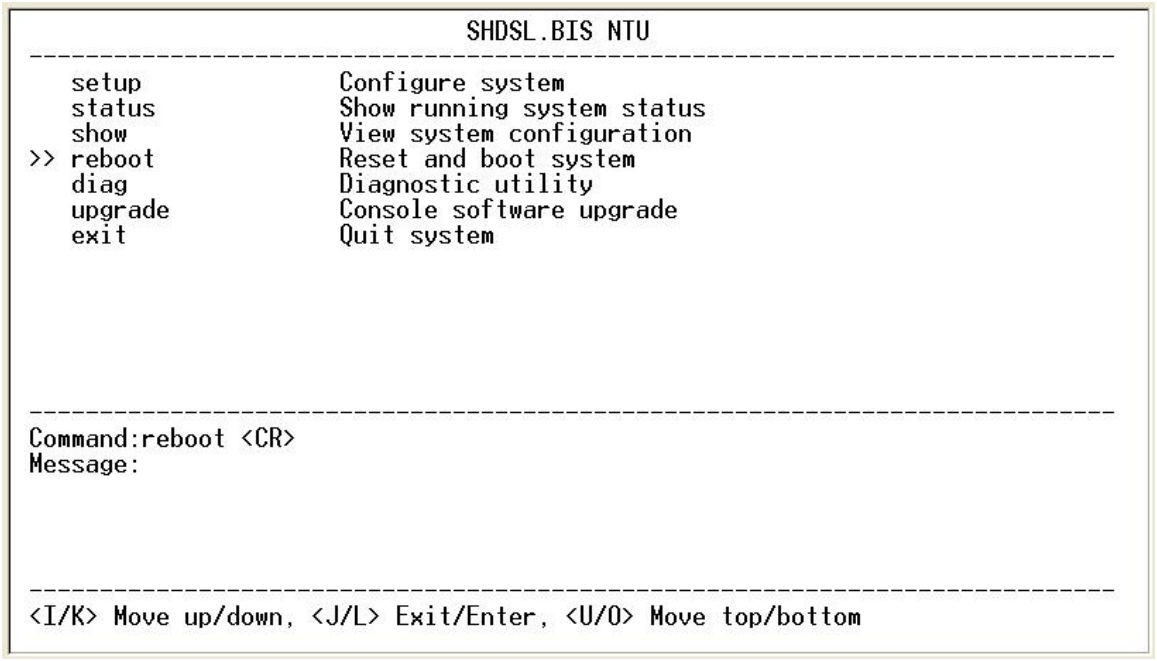

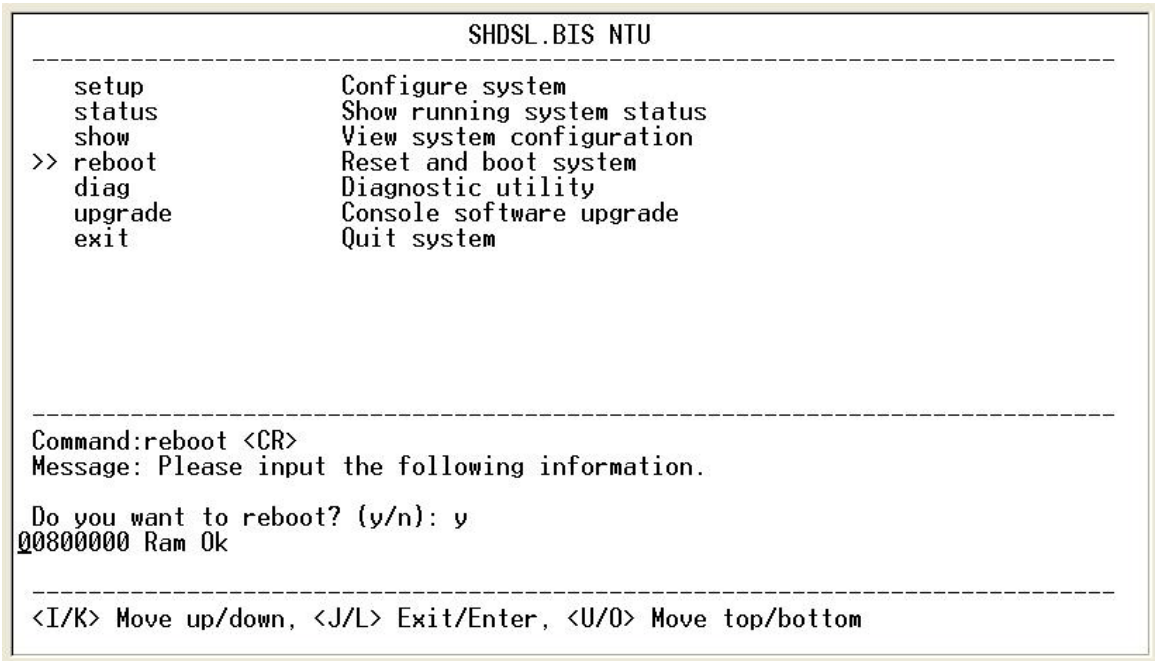

After the reboot operation has finished, RAM test will start again.

5.6 View the system status

You can use the status command to view the status of SHDSL, E1, Serial and Ethernet as well as statistic and clear the statistic log. Select **status** and press [ENTER].

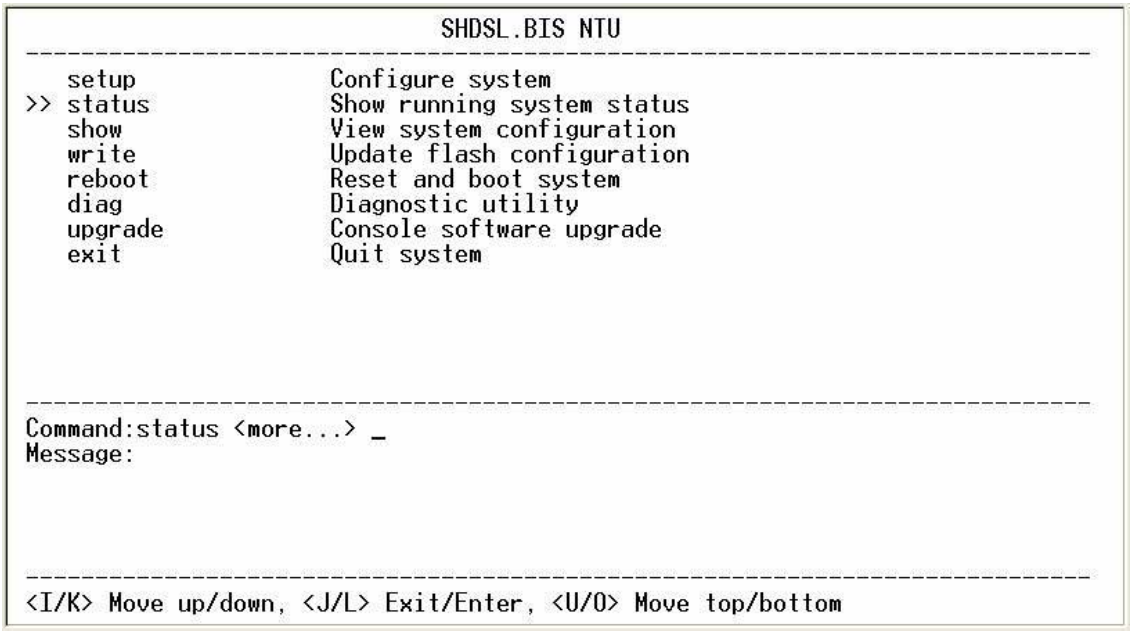

5.6.1. View the SHDSL status

Select **SHDSL** command to show the status of SHDSL.

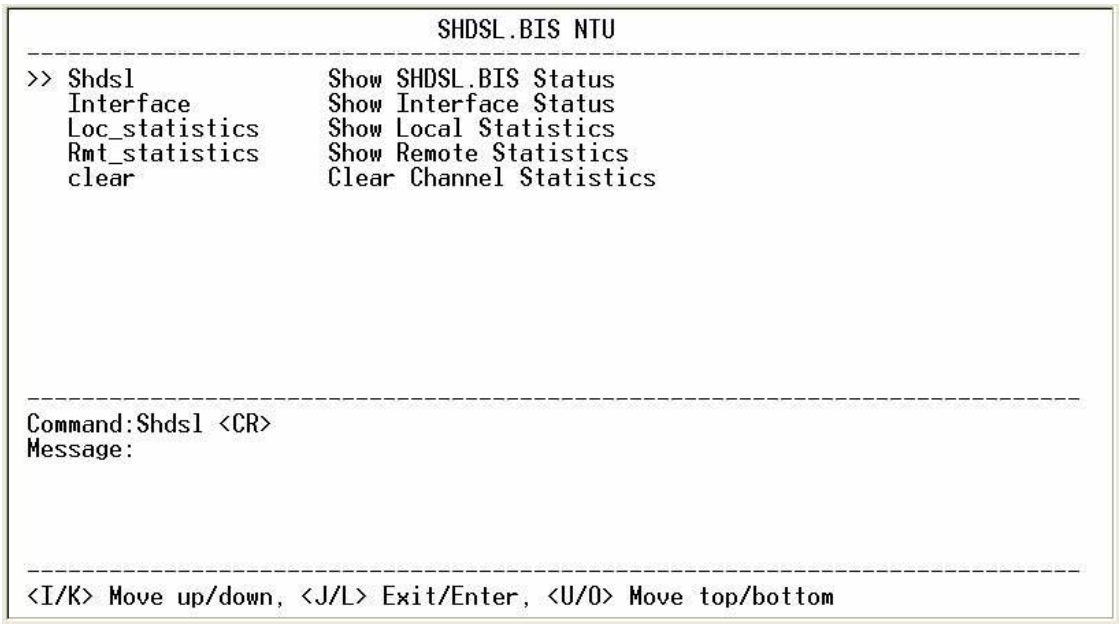

```
                              SHDSL.BIS NTU
 ---------------------------------------------------------------------------
<Shdsl Status>
Channel              :          LocA                      RmtA
STU  Type            :   STU-C-INTCLK                    STU-R
DSL  Type            :      SHDSL.BIS                 SHDSL.BIS
Line Rate(Kbps)      :          2304                      2304
SNR Margin (dB)      :          26.0                      26.0
Attenuation(dB)      :           2.0                       3.0

Led On/Off Status    :          0006                      0016
Led Flash Status     :          0000                      0000


Loopback State       :       Disable                   Disable
Bert Test State      :       Disable                   Disable
Bert Sync            :      Not Sync                  Not Sync
Bert Error Count     :             0                         0


Refresh counter:4, Press 'Ctrl+C' to quit...

 ---------------------------------------------------------------------------
 <I/K> Move up/down, <J/L> Exit/Enter, <U/O> Move top/bottom
```

The SHDSL status will display a real-time status of the DSL on local side and remote side if connected. The monitoring window displays the DSL line parameters, such as SNR margin and attenuation. The lower half of the window displays the loopback and BER test status. While in this display mode the terminal window will not timeout. To exit the window, press CTRL-C to quit.

5.6.2. View the Interface status

Select **Interface** command to show the status of Interface

```
                              SHDSL.BIS NTU
 ---------------------------------------------------------------------------
    Shdsl              Show SHDSL Status
 >> Interface          Show Interface Status
    Current Perf       Show Current Performamce
    Loc_statistics     Show Local Statistics
    Rmt_statistics     Show Remote Statistics
    clear              Clear Channel Statistics






 ---------------------------------------------------------------------------
 Command:Interface <CR> _
 Message:




 ---------------------------------------------------------------------------
 <I/K> Move up/down, <J/L> Exit/Enter, <U/O> Move top/bottom
```

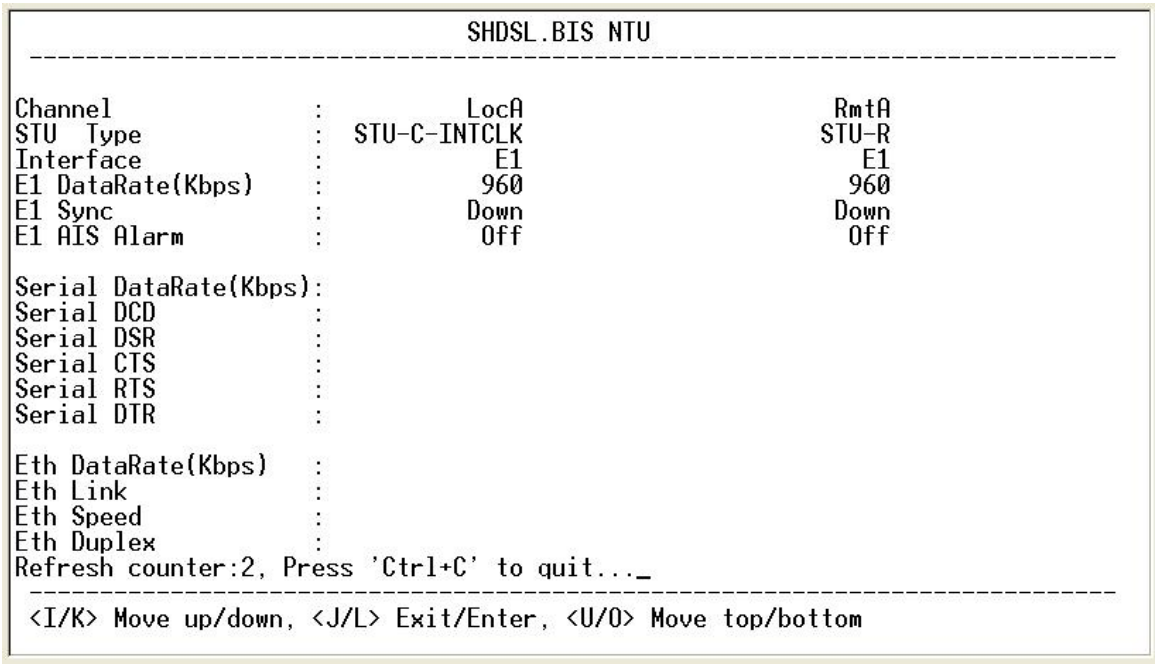

The interface status will display a real-time status of the interface on local side and remote side if connected. The monitoring window displays the STU type, interface mode, status on E1, Serial and Ethernet. While in this display mode the terminal window will not timeout. To exit the window, press CTRL-C to quit.

The table of SHDSL line rate vs. data rate:

SHDSL Line rate	Data Rate (kbps)	
	Number of time slot for E1	Nx64K for Serial and Ethernet
5696(n=89)	Cannot use	89
5632(n=88)	Cannot use	88
5568(n=87)	Cannot use	87
……..	……..	…
……..	……..	…
……..	……..	…
……..	……..	…
2368(n=37)	Cannot use	37
2304(n=36)	Cannot use	36
2240(n=35)	Cannot use	35
2176(n=34)	Cannot use	34
2112(n=33)	Cannot use	33
2048(n=32)	32(unframed)	32
1984(n=31)	31	31
1920(n=30)	30	30
1856(n=29)	29	29
1792(n=28)	28	28
……..	……..	…
……..	……..	…
……..	……..	…
……..	……..	…
384(n=6)	6	6
320(n=5)	5	5
256(n=4)	4	4
192(n=3)	3	3
192(n=3)	**2**	**2**
192(n=3)	**1**	**1**

Due to SHDSL.bis working line rate starts up from 192kbps(n=3) , all setting on all interfaces with apply 64kbps(n=1) and 128kbps(n=2) are actually using on 192kbps DSL line rate.

The above table is for using as Annex F and G. When using Annex A and B, no N values more than 36.

5.6.3. View the Statistics

Select **Loc_statistics** command to show the statistics information in 15 minutes or 24 hour via [TAB] to choose.

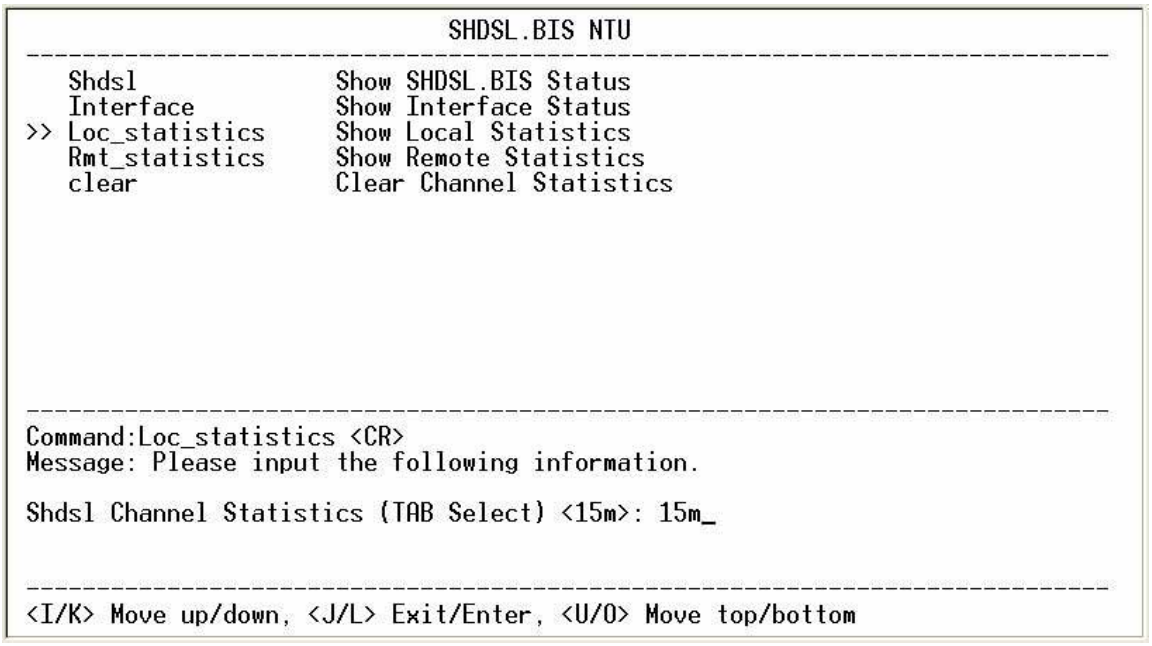

The statistics display window will display performance monitor data for the selected interval (15 minutes or 24 hours). The display will show the recorded results for ES (errored seconds), SES
(severely errored seconds), UAS (unavailable seconds), and LOSW (loss of sync word). While in this display mode the terminal window will not timeout. The 15 minute display window will display all the performance information for each 15 minutes interval in the current 24 hours period. There are a total of 96 intervals. Press the ENTER key to display the next page of intervals. To exit the window, press CTRL-C and then ENTER.

The performance monitor is capable of storing and retrieving performance information for each 24 hours interval, up to 7 days.

For E1 Interface model, there are SHDSL and E1 item.

View the performance monitor data for the selected interval 15 minutes:

```
                              SHDSL.BIS NTU
 ------------------------------------------------------------------------------
Local                      SHDSL                      E1
                 -------------------------    ------------------
15 Minute         ES    SES    UAS   LOSW      ES    SES    UAS
Current            0      0      0      0       0      0      2
Quarter  1         0      0      0      0       0      0      0
Quarter  2         0      0      0      0       0      0      0
Quarter  3         0      0      0      0       0      0      0
Quarter  4         0      0      0      0       0      0      0
Quarter  5         0      0      0      0       0      0      0
Quarter  6         0      0      0      0       0      0      0
Quarter  7         0      0      0      0       0      0      0
Quarter  8         0      0      0      0       0      0      0
Quarter  9         0      0      0      0       0      0      0
Quarter 10         0      0      0      0       0      0      0
Quarter 11         0      0      0      0       0      0      0
Quarter 12         0      0      0      0       0      0      0
Quarter 13         0      0      0      0       0      0      0
Quarter 14         0      0      0      0       0      0      0
More .... <CR>
_
 ------------------------------------------------------------------------------
 <I/K> Move up/down, <J/L> Exit/Enter, <U/O> Move top/bottom
```

View the performance monitor data for the selected interval 7days:

```
                              SHDSL.BIS NTU
 ------------------------------------------------------------------------------
Local                      SHDSL                      E1
                 -------------------------    ------------------
24 Hour           ES    SES    UAS   LOSW      ES    SES    UAS
Current            0      0      0      0       0      0     53
Day  1             0      0      0      0       0      0      0
Day  2             0      0      0      0       0      0      0
Day  3             0      0      0      0       0      0      0
Day  4             0      0      0      0       0      0      0
Day  5             0      0      0      0       0      0      0
Day  6             0      0      0      0       0      0      0
Day  7             0      0      0      0       0      0      0






Press any key to Return Menu Window..._
 ------------------------------------------------------------------------------
 <I/K> Move up/down, <J/L> Exit/Enter, <U/O> Move top/bottom
```

For Serial and Ethernet Interface model, there is only the SHDSL item.

View the performance monitor data for the selected interval 15 minutes:

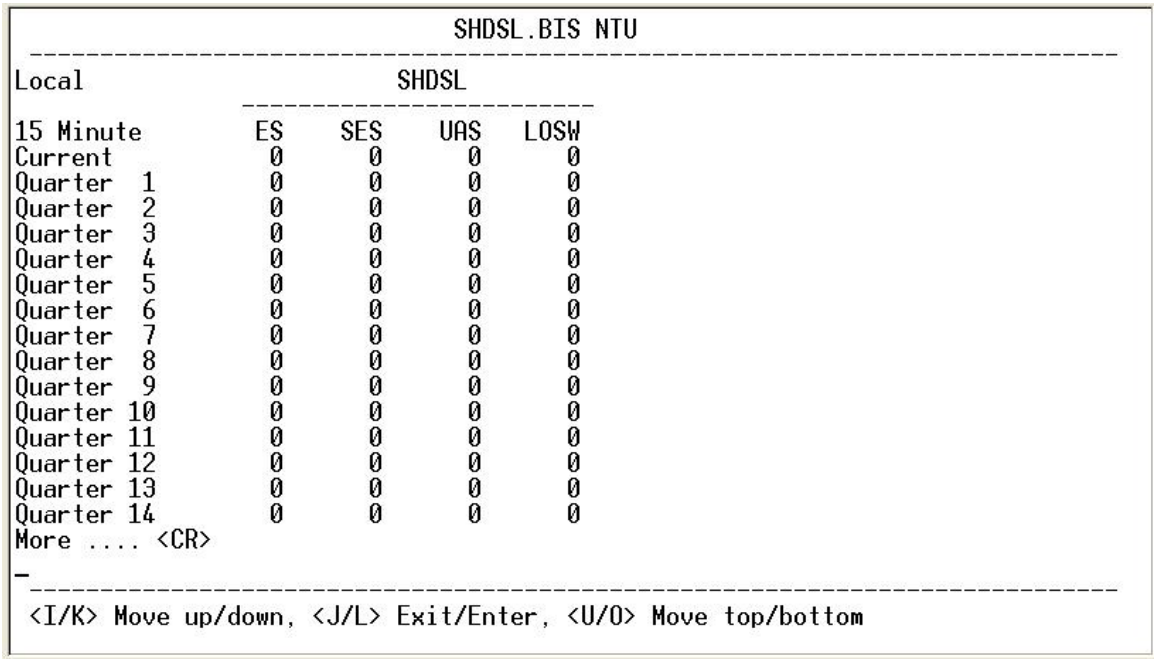

View the performance monitor data for the selected interval 7 days:

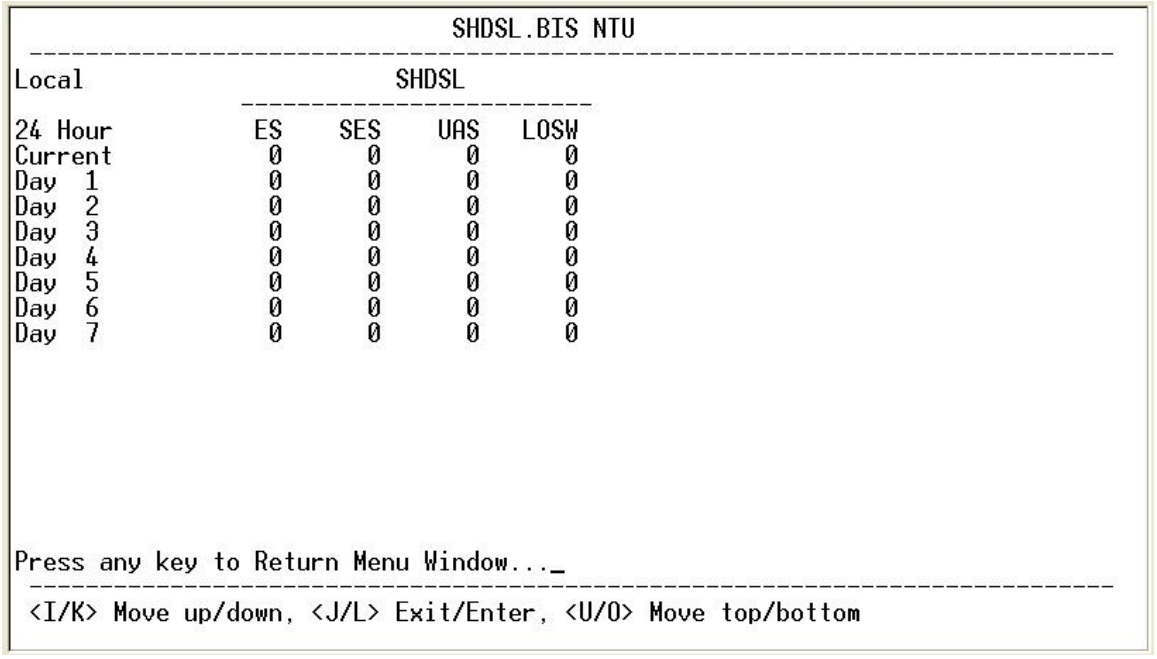

When clear the statistic log file, select **clear** and press [ENTER].

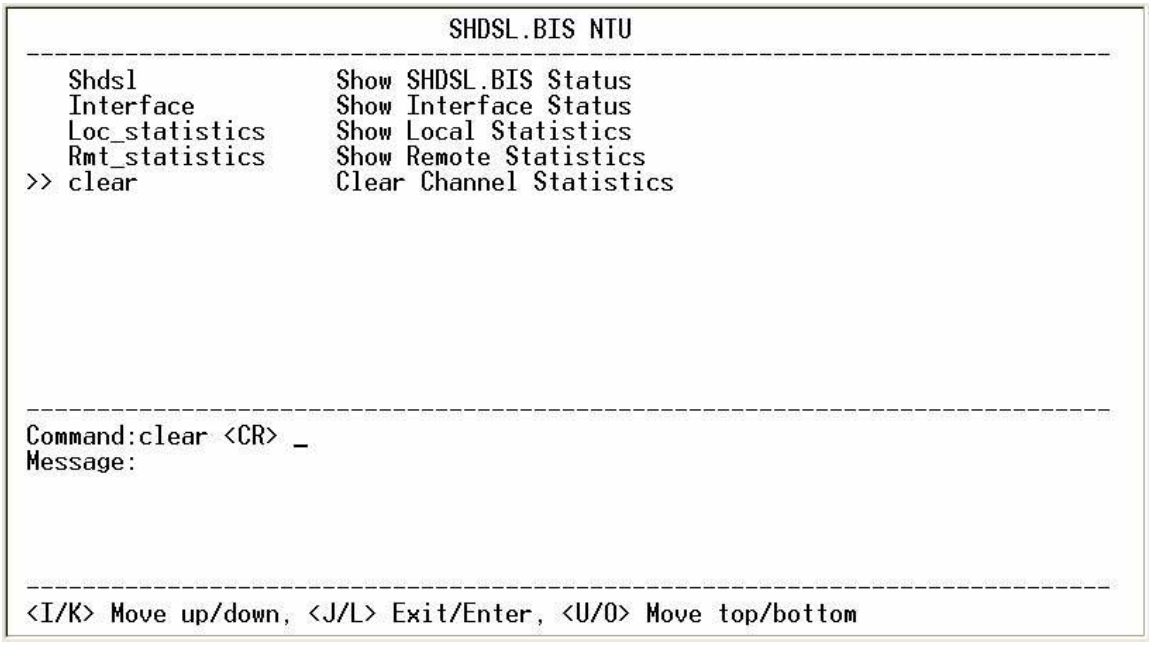

If you want to show the remote side's statistics, please use the Rmt-statistics function as the following.

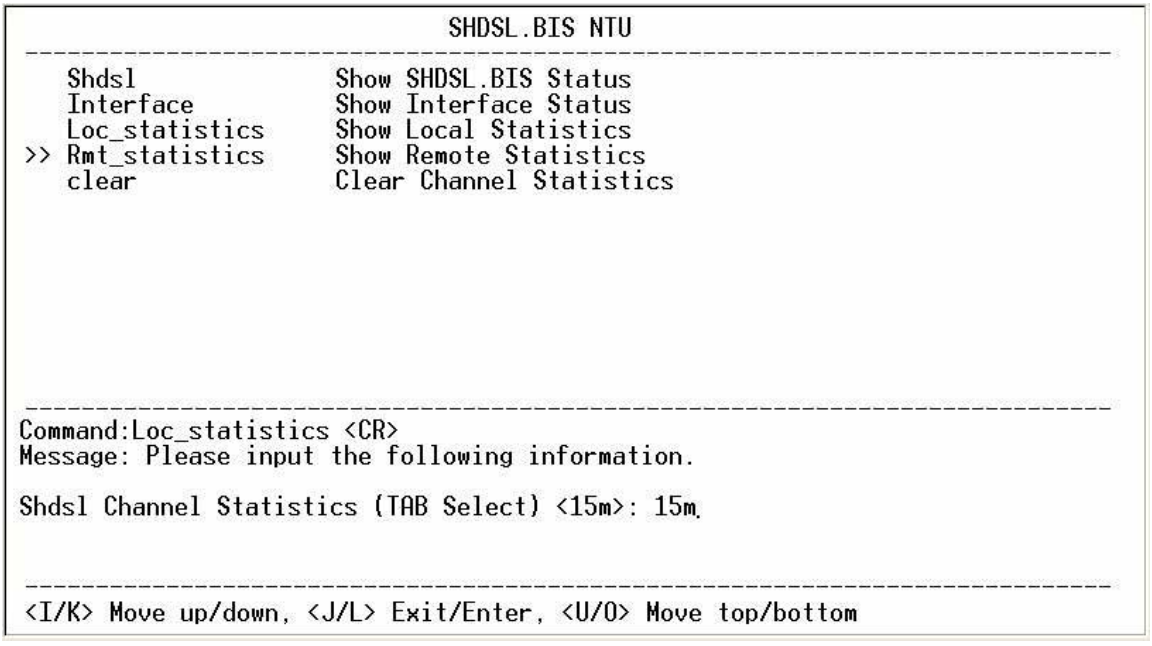

The following are commonly used acronyms:

ES	Number of errored seconds in which one or more CRC (Cyclic Redundancy Check) error events occurred during the current interval. This value is updated every second.
UAS	Number of unavailable seconds in which a failed signal occurred during the current interval. This value is updated every second.
SES	Number of severely errored seconds in which 832 or more CRC error events occurred during the current interval. This value is updated every second.
LOSW	Number of seconds with loss of sync word during the current interval. This value is updated every second.

5.7 View System Configuration

By using show command, you can view the system configuration. Select **show** and press [ENTER] or [RIGHT].

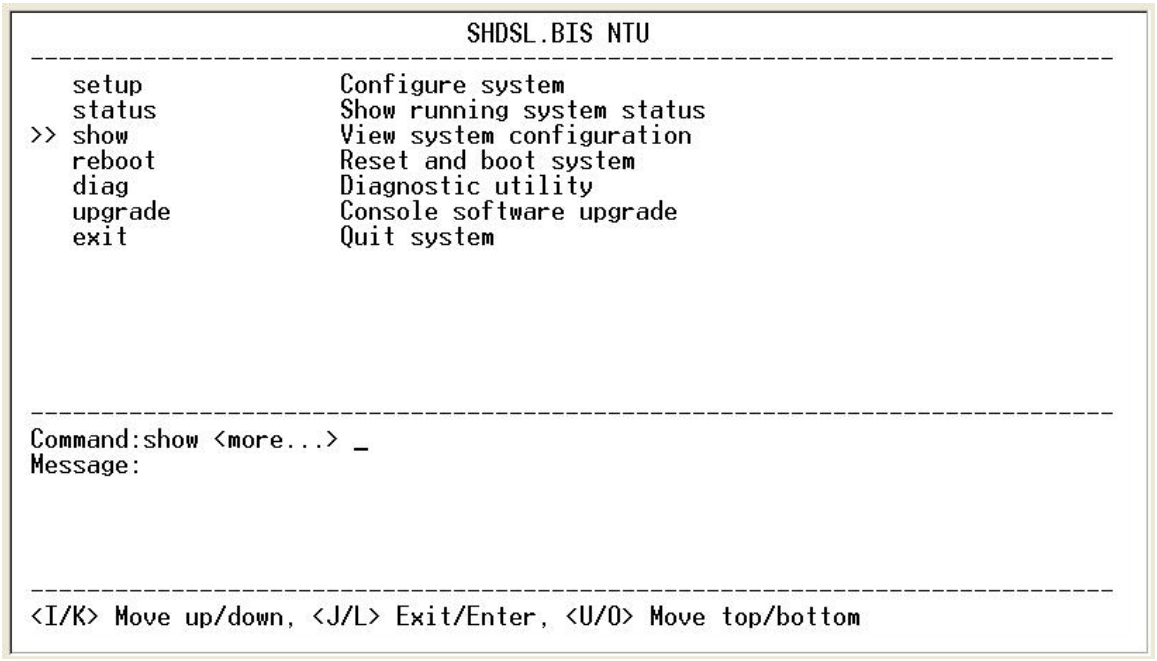

5.7.1. Show system Information

To show system information, please select **system** and press [ENTER] or [RIGHT]. The screen will prompt the system information.

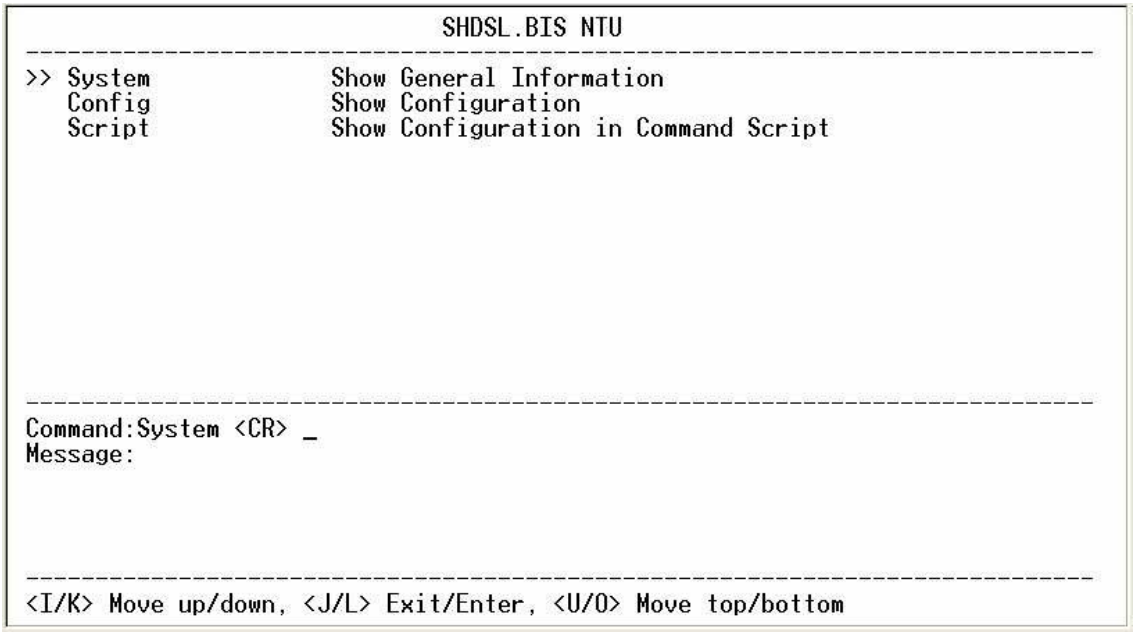

Our cursor is already on the **System** command, so press ENTER and the following screen will display the general system information.

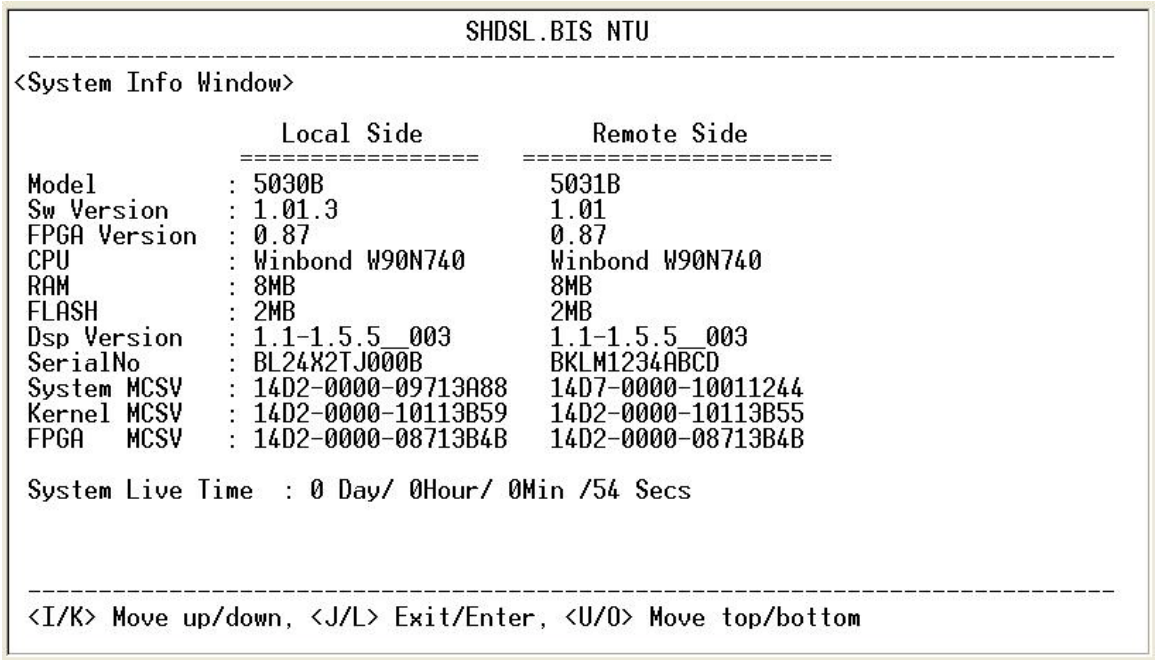

Most of the information on this screen is either self-explanatory or it is simply irrelevant for the end user. However, two items, the Kernel (Software) and FPGA (Field Programmable Gate Array) version will give the software and hardware versions respectively of NTU. These are important to know in case new firmware becomes available in the future to add extra functions of fixing unknown bugs from the original manufactured equipment.

5.7.2. Show system with listing format

To show the system configuration, please select **Config** and press [ENTER] or [RIGHT]. The screen will prompt the all configuration data.

For E1 interface mode:

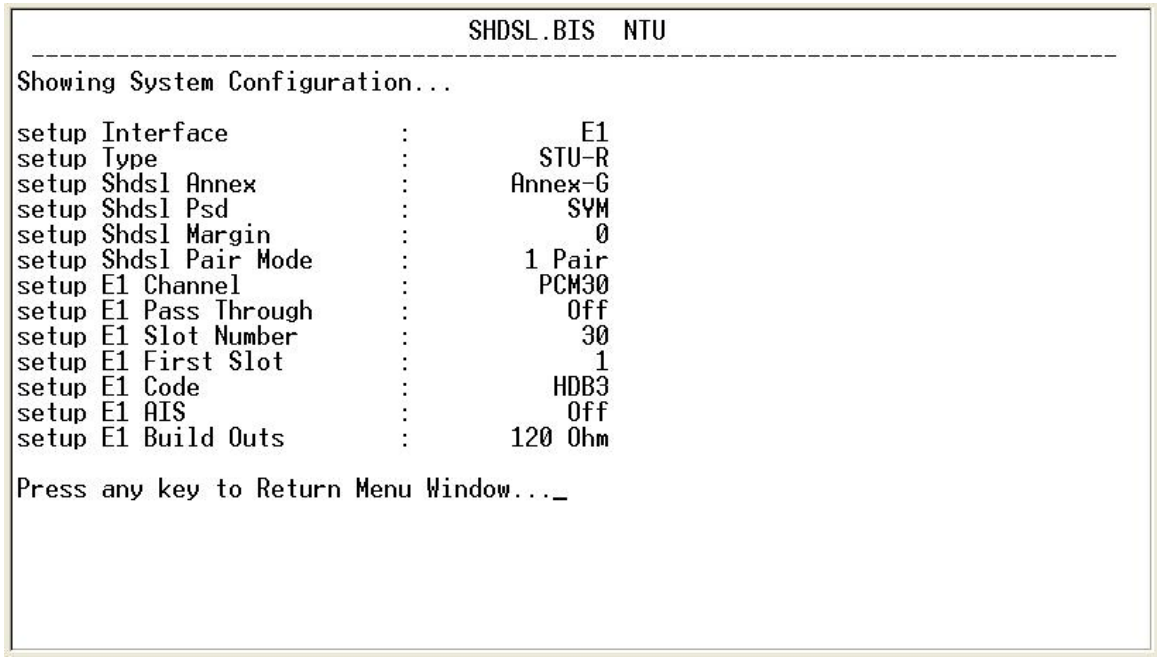

For Serial interface mode:

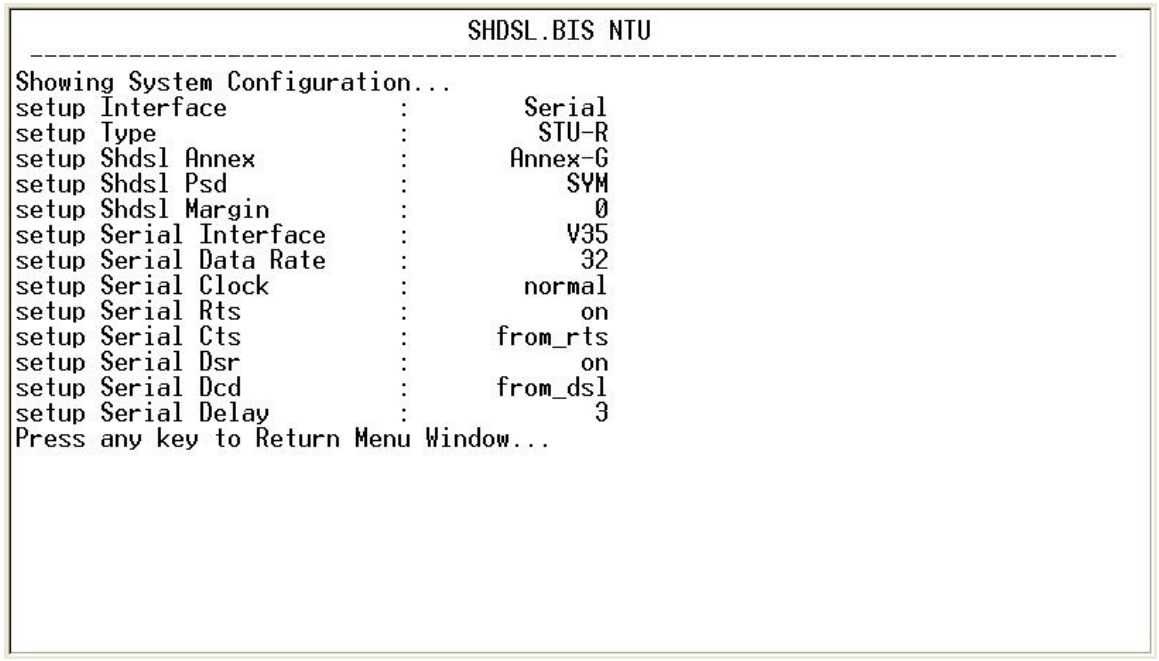

For Ethernet interface mode:

```
                                SHDSL.BIS NTU
 ------------------------------------------------------------------------------
Showing System Configuration...
setup Interface             :      Ethernet
setup Type                  :         STU-R
setup Shdsl Annex           :       Annex-G
setup Shdsl Psd             :           SYM
setup Shdsl Margin          :             0
setup Ethernet Auto Config  :        Enable
setup Ethernet Speed        :          100M
setup Ethernet Duplex       :   Full-Duplex
setup Ethernet Rate         :            36
Press any key to Return Menu Window...
```

For E1 and Serial interface mode:

```
                                SHDSL.BIS NTU
 ------------------------------------------------------------------------------
Showing System Configuration...
setup Interface             :     E1+Serial
setup Type                  :         STU-R
setup Shdsl Annex           :       Annex-G
setup Shdsl Psd             :           SYM
setup Shdsl Margin          :             0
setup E1 Channel            :        PCM31C
setup E1 Slot Number        :            31
setup E1 First Slot         :             1
setup E1 Code               :          HDB3
setup E1 AIS                :           Off
setup E1 Build Outs         :       120 Ohm
setup Serial Interface      :           V35
setup Serial Data Rate      :            32
setup Serial Clock          :        normal
setup Serial Rts            :            on
setup Serial Cts            :      from_rts
setup Serial Dsr            :            on
setup Serial Dcd            :      from_dsl
setup Serial Delay          :             3
Press any key to Return Menu Window...
```

For E1 and Ethernet interface mode:

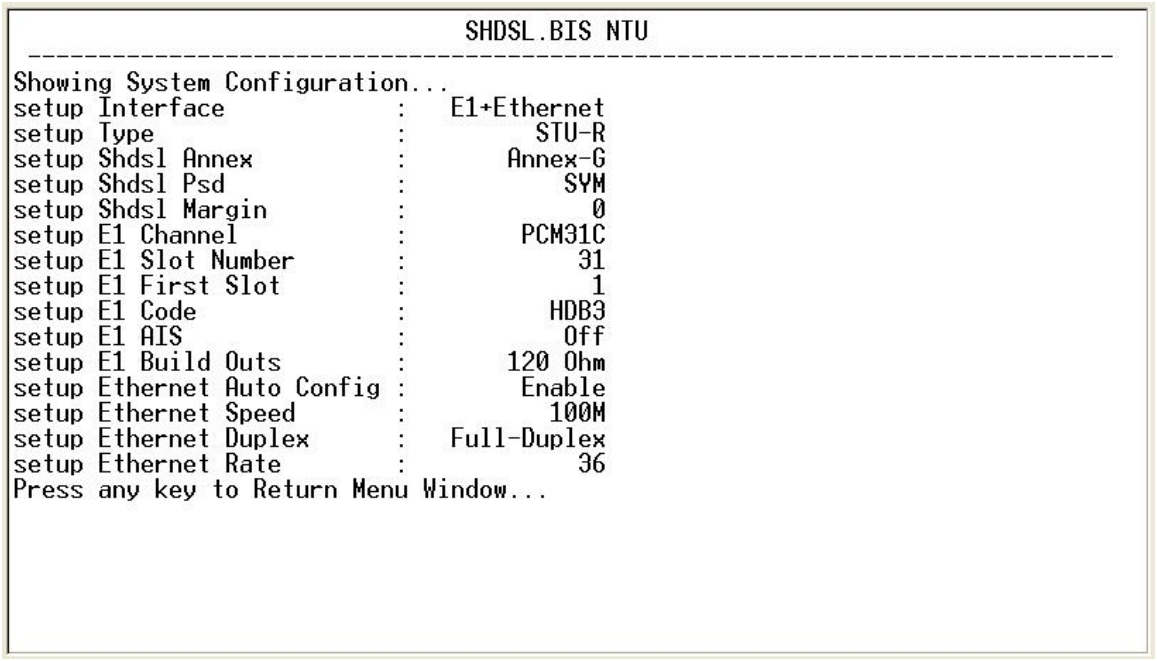

5.7.3. Show system with script format

To show the system script file, please select **Script** and press [ENTER] or [RIGHT]. The screen will prompt the configuration in script type.

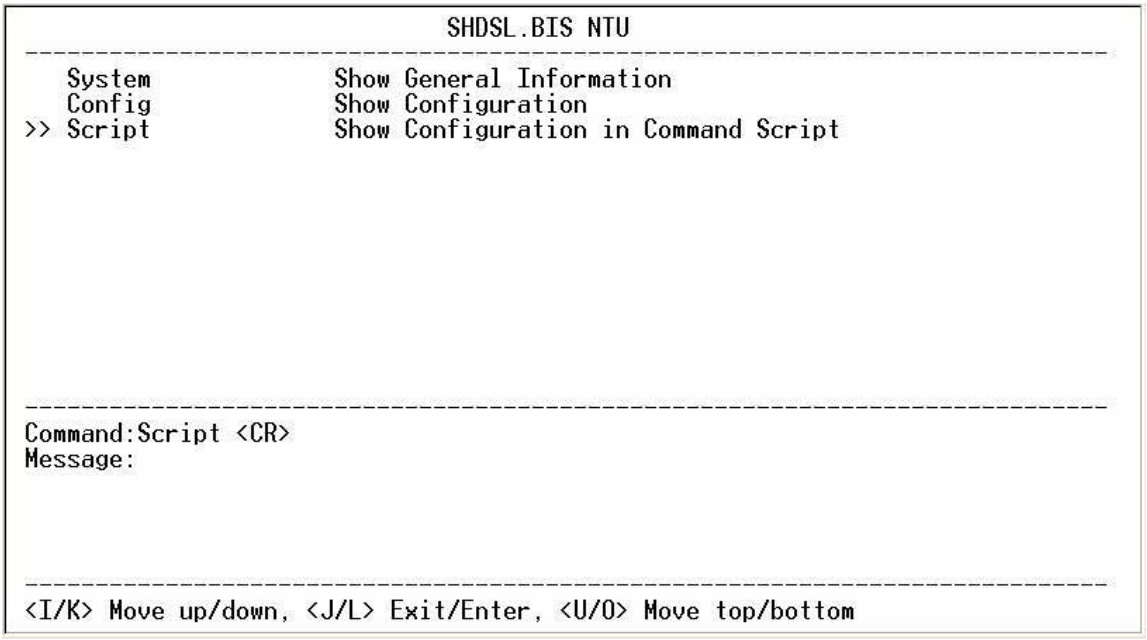

For E1 interface mode:

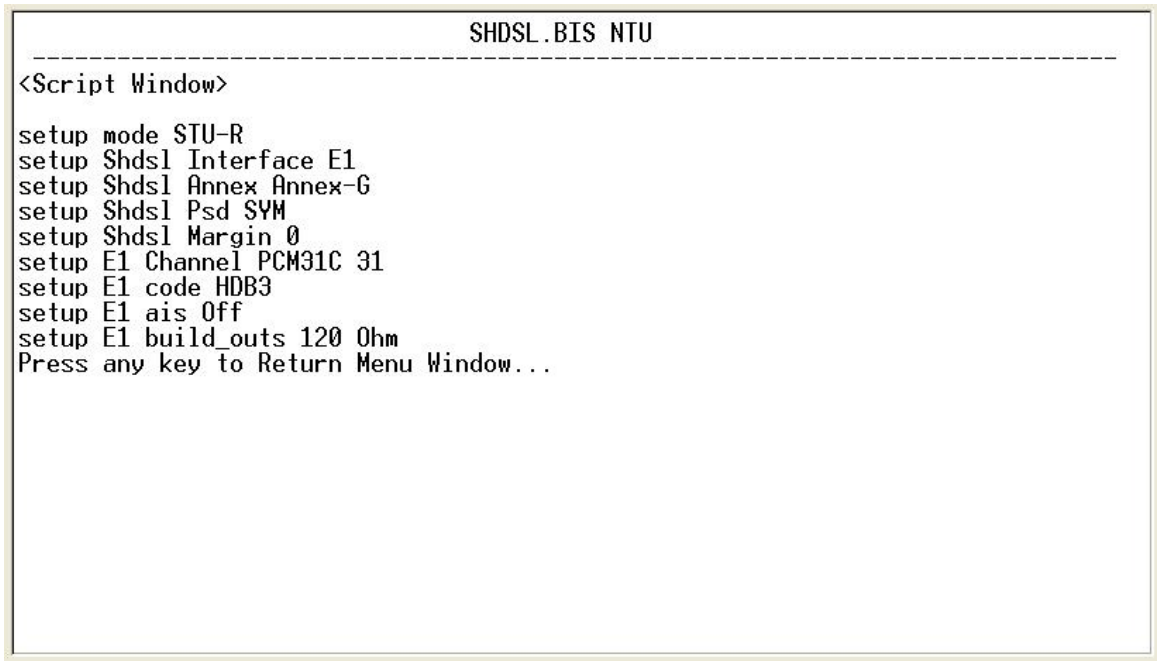

For Serial interface mode:

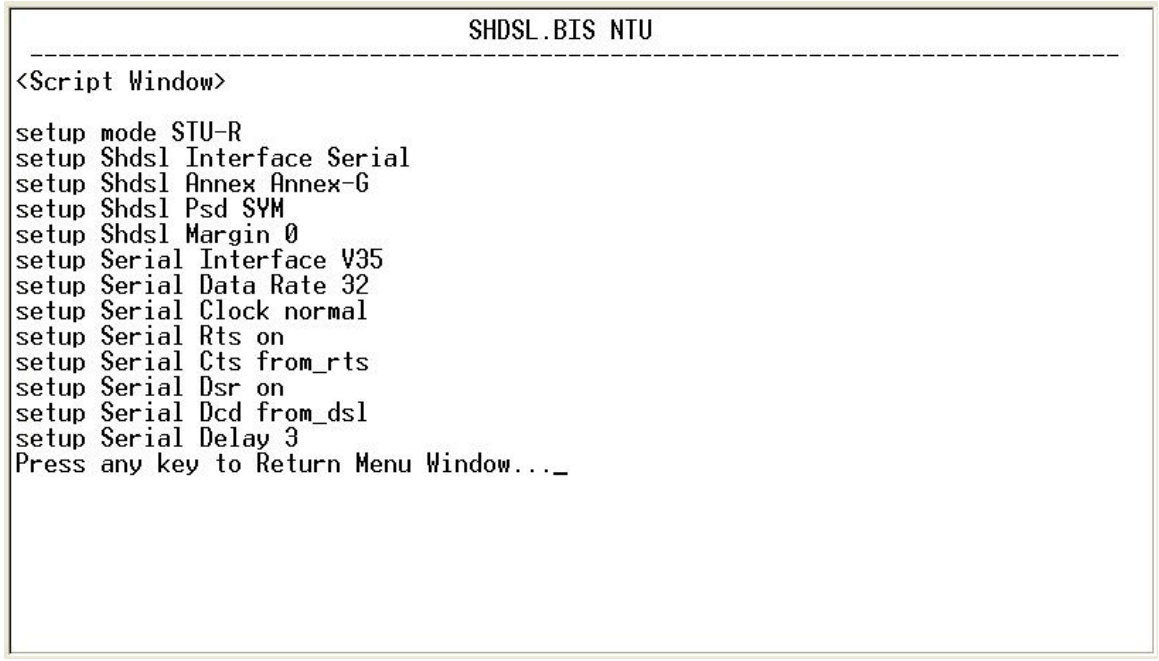

For Ethernet interface mode:

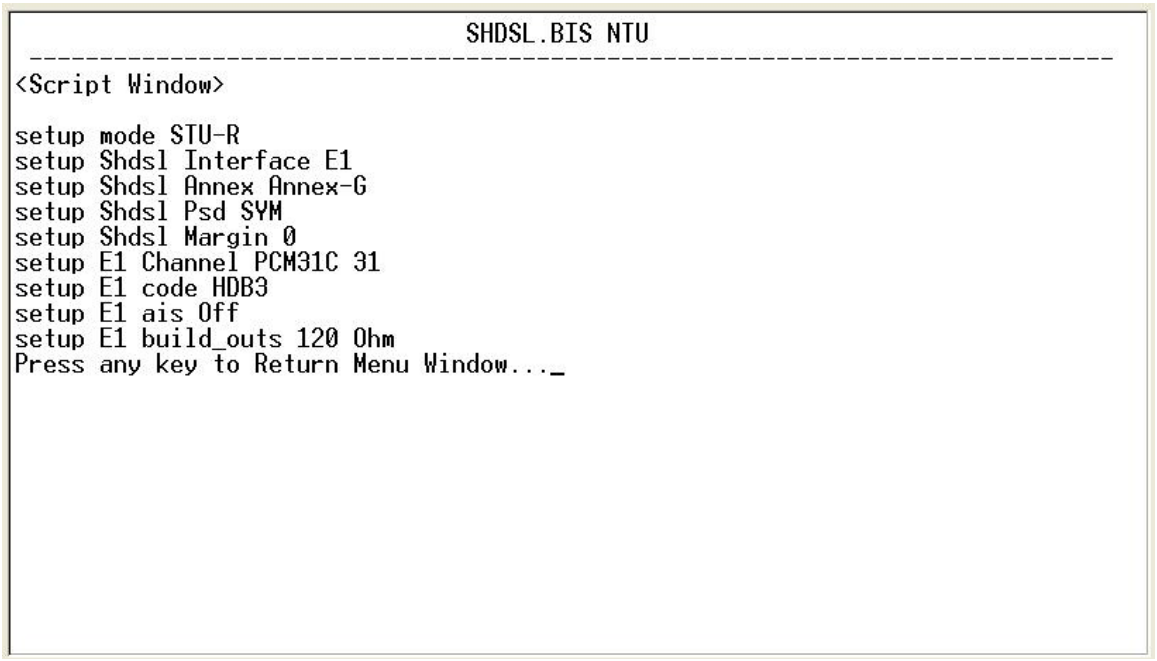

For E1 + Serial interface mode:

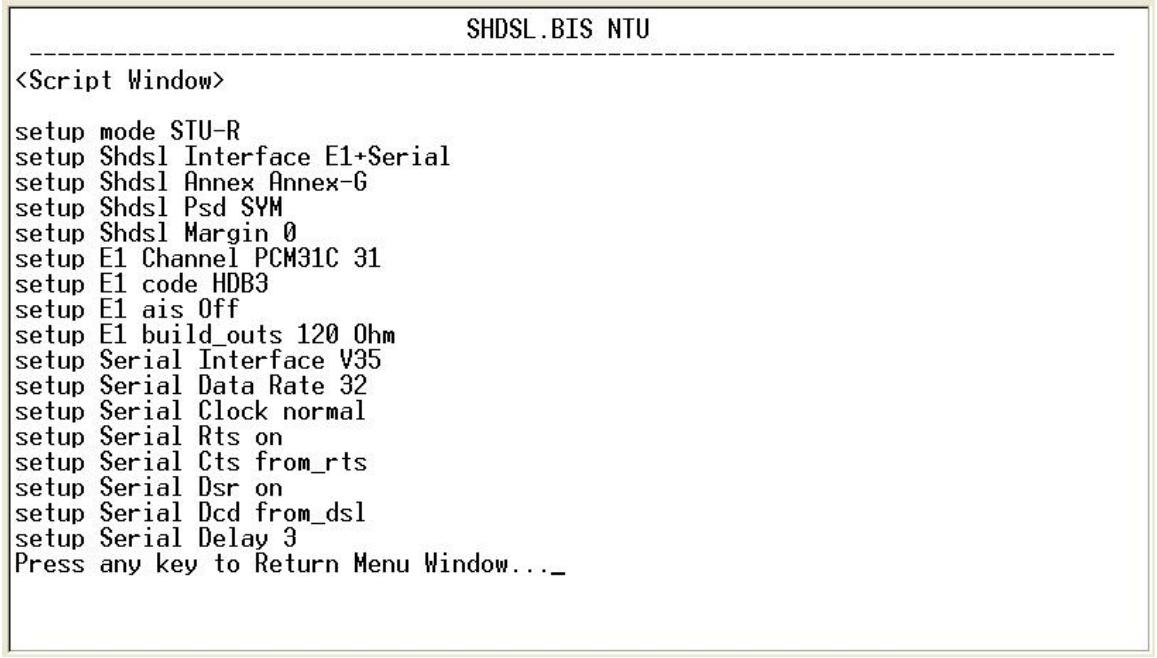

For E1 + Ethernet interface mode:

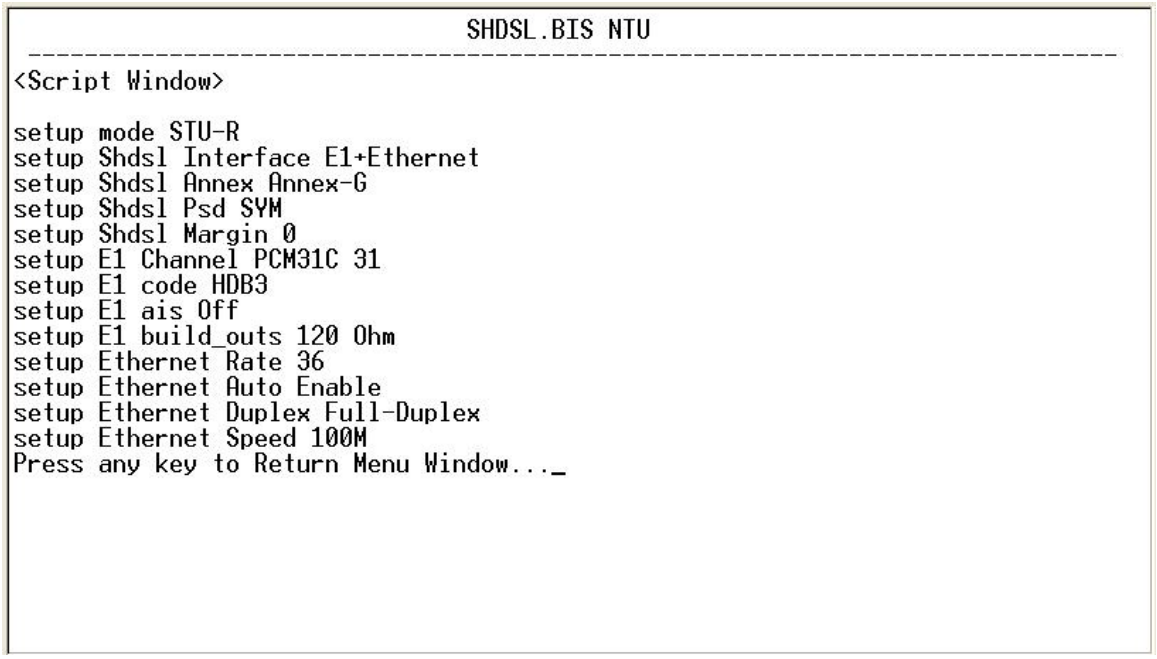

5.8 Upgrade

This section will introduce how to upgrade the kernel and FPGA code of G.SHDSL .Bis NTU. Select **upgrade** in main menu and press [ENTER] or [RIGHT].

Please notice that when you use Remote Upgrade feature. It means you can use that feature to update firmware to remote side. It will be describes below.

During an upgrade and re-flash, the normal transmissions will be halted, so the upgrade should be done when the system is taken offline or done during a time of extremely low impact to the line of customer.

The upgrade procedures use the Xmodem protocol via the serial console port of rear panel.

Following show the upgrade feature:

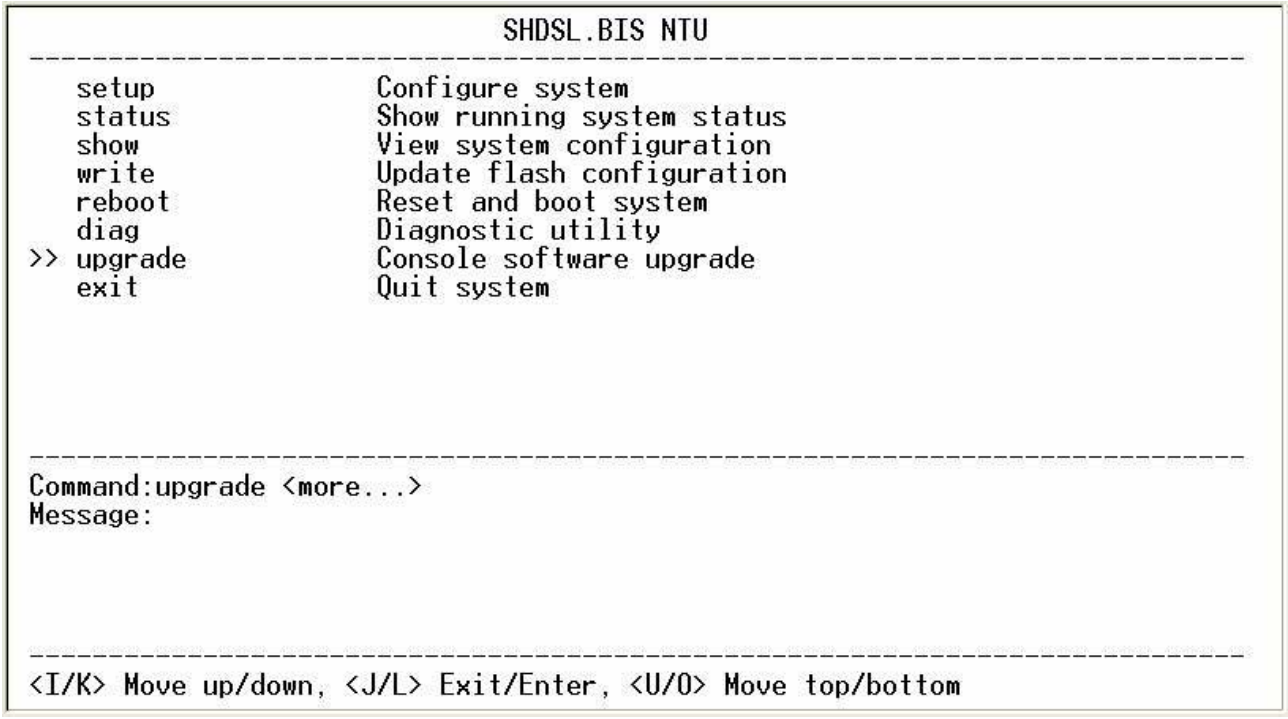

Before upgrading the NTU, you must have the main software or FPGA code in your computer.

If you want to upgrade the kernel code: select **Kernel** and press [ENTER] or [RIGHT].

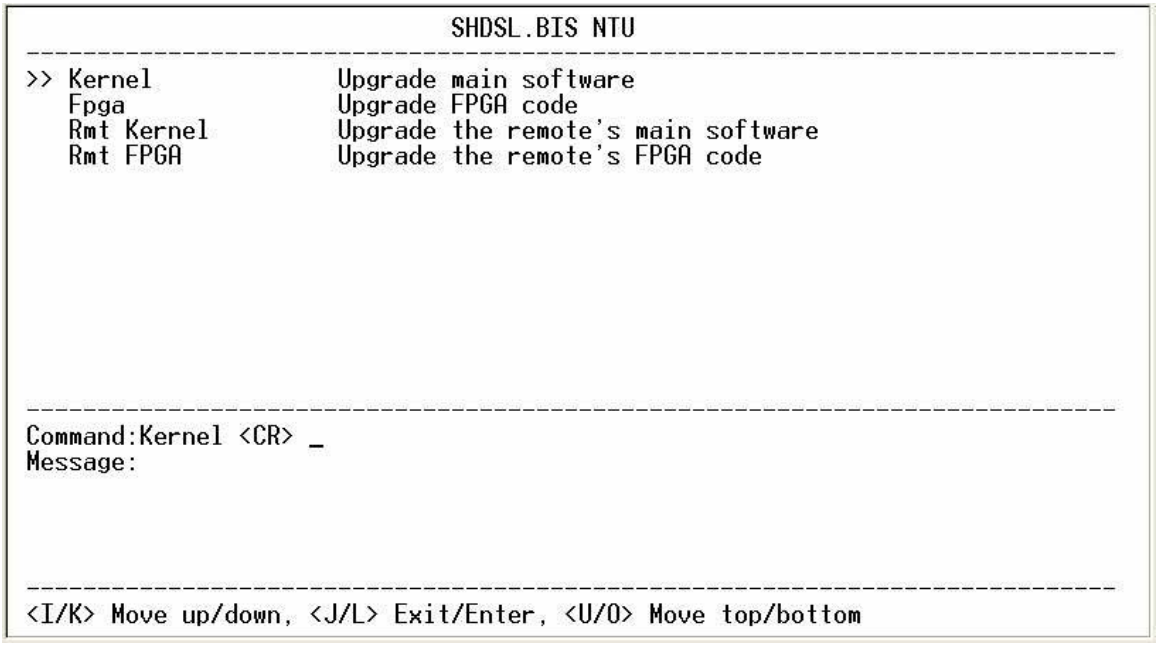

Click Send file in terminal access program, hyper terminal, to send the file. Make sure the sending protocol is **Xmodem**. Select the source file in shown window and then press OK.

When it is upgrading, you can see the following:

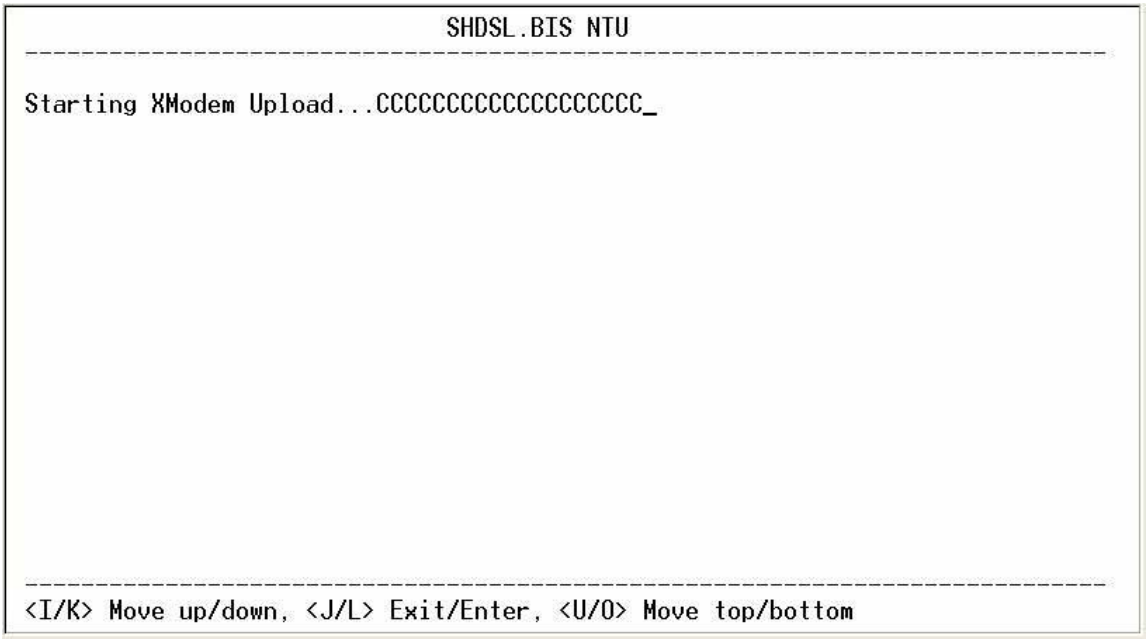

If you want to upgrade the FPGA code: Select **FPGA** and press [ENTER] or [RIGHT].

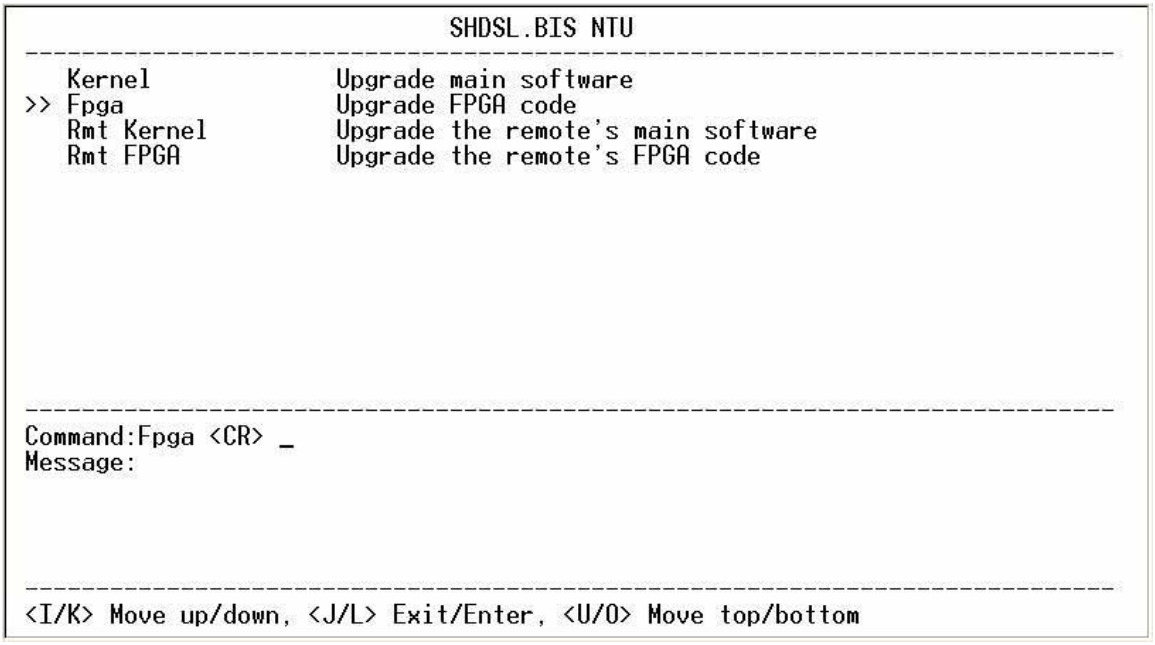

When it is upgrading, you can see the following:

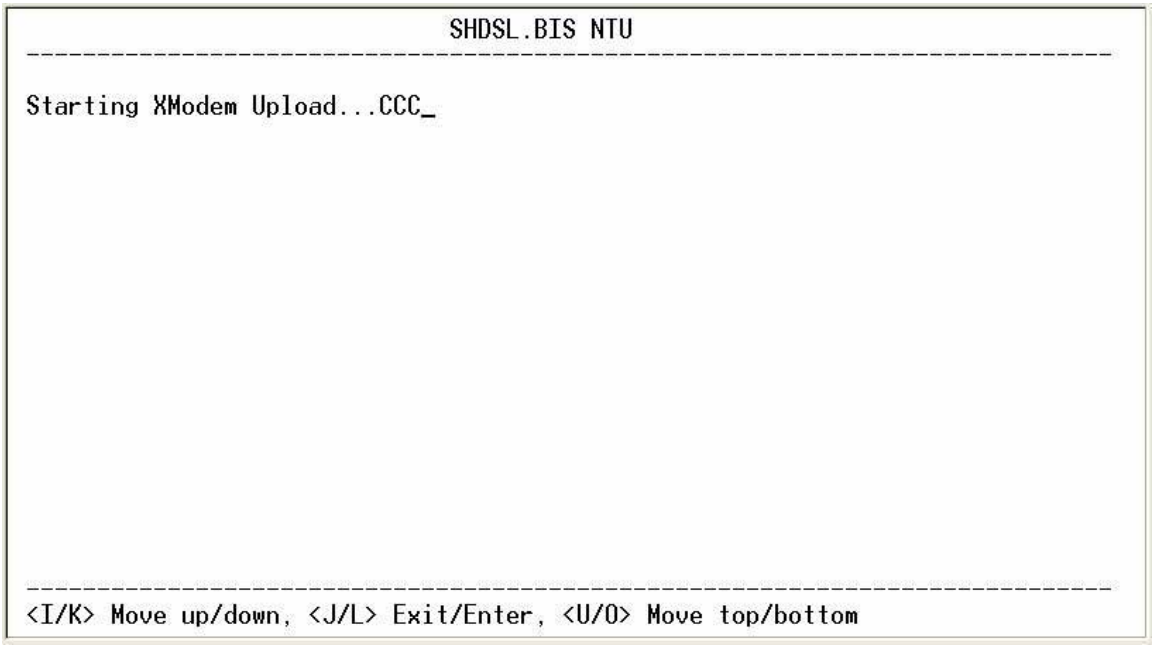

Below showed are remote upgrade features:

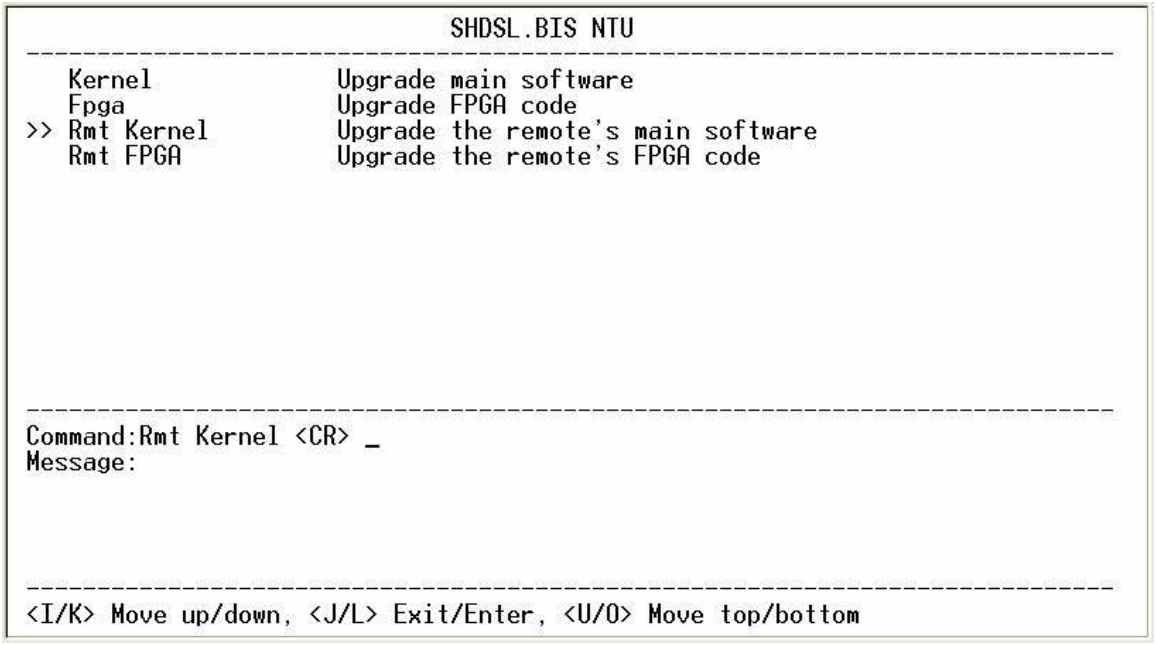

When it is upgrading, you can see as following:

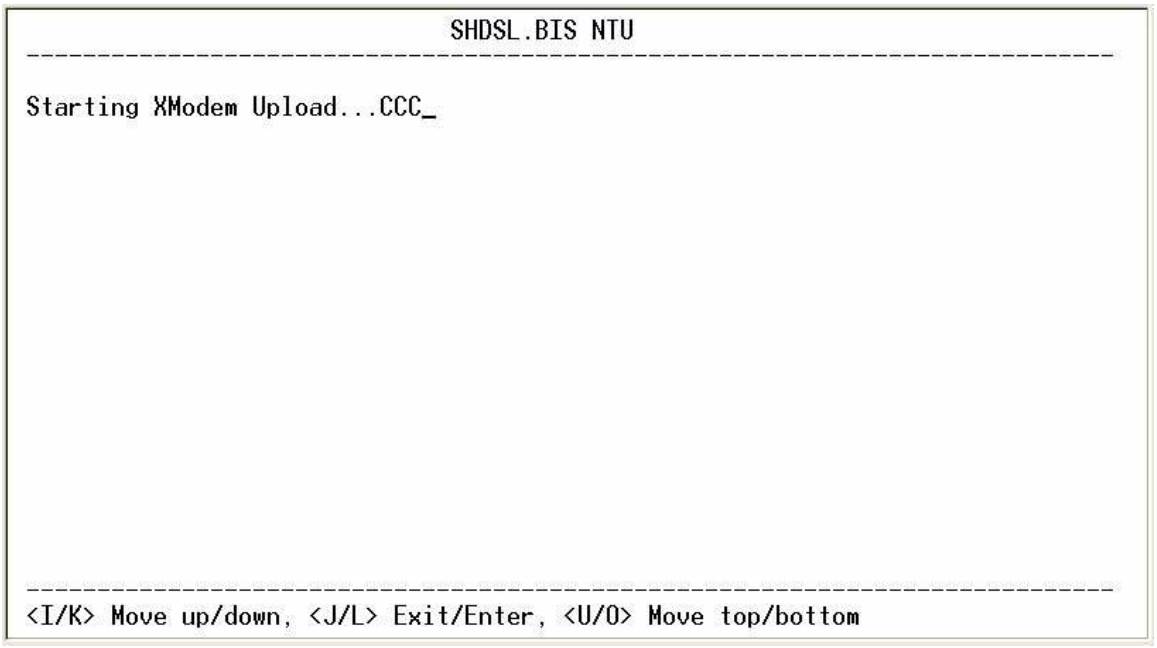

Before upgrading the NTU, you must have the Kernel code and FPGA code in your computer.

WARNING!!: Do not allow any interruption of power during the erase and re-write operation or the Flash will be left in an unknown state and the device will no longer be able to function. The device must then be returned to the factory for repair.

5.9 Diagnostic

The diagnostic facility allows you to test the different aspects of your G.SHDSL .Bis NTU to determine if it is working properly.

Select **diag** and press [ENTER] or [RIGHT].

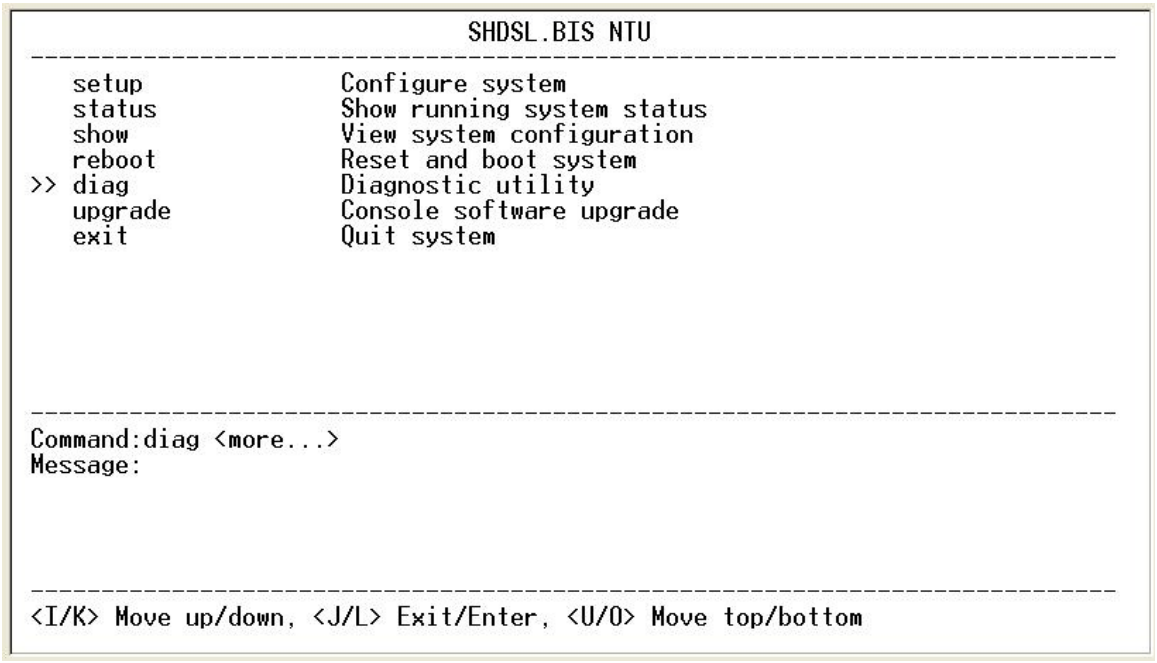

Loopback can test whether if the NTU is working properly with the connected device.

Press [ENTER] or [RIGNT] to setup the loopback.

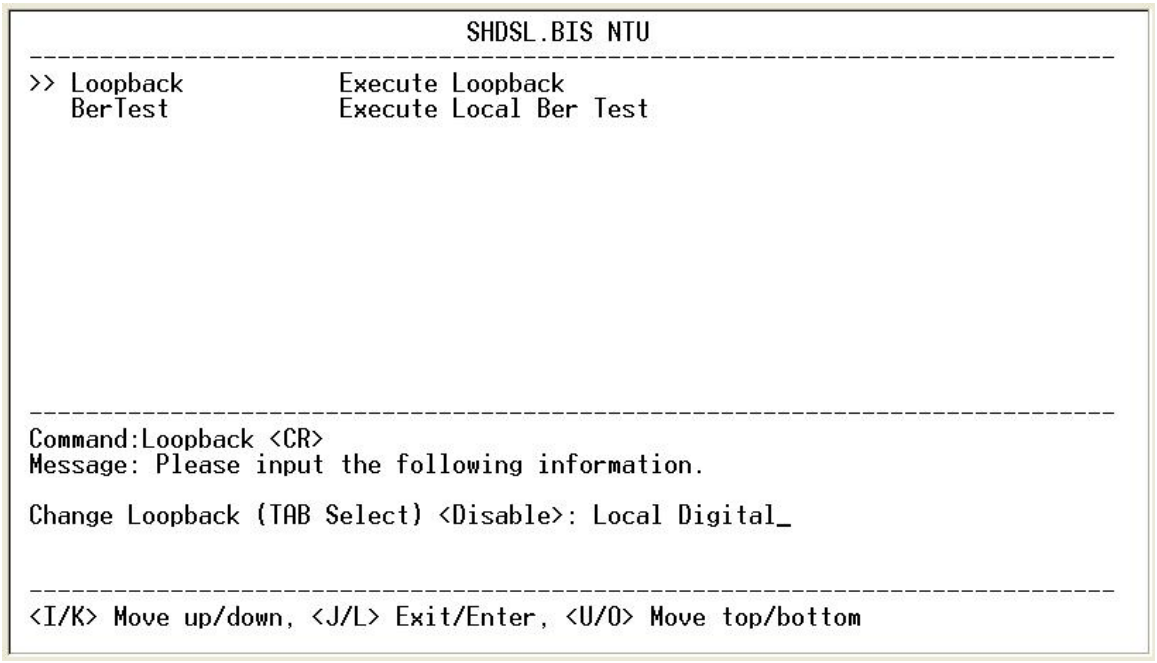

For E1/T1 Interface model as CO side, there are have: Local Digital, local, remote line, remote payload, farend line and farend payload.

For Serial Interface model as CO side, there are: Local Digital, local, remote line, remote payload, farend line, farend payload and V.54.

For E1/T1 Interface model as CPE side, there are: Local Digital, remote line, remote payload, farend line and farend payload.

For Serial Interface model as CPE side, there are: Local Digital, remote line, remote payload, far-end line, far-end payload and V.54.

If the device has been connected or under handshake, there will not are far-end line, far-end payload and V.54.There are no diagnostic function on Ethernet interface model.

Stand alone NTU, no connection with other NTU:

E1/T1 interface CO side	Serial interface CO side
Local Digital	Local Digital
Local	Local
Remote line	Remote line
Remote payload	Remote payload

E1/T1 interface CPE side	Serial interface CPE side
Local Digital	Local Digital
Remote line	Remote line
Remote payload	Remote payload

After connection both CO side and CPE side:

E1/T1 interface CO side	Serial interface CO side
Local Digital	Local Digital
Local	Local
Remote line	Remote line
Remote payload	Remote payload
Far-end line	Far-end line
Far-end payload	Far-end payload
	V.54

E1/T1 interface CPE side	Serial interface CPE side
Local Digital	Local Digital
Remote line	Remote line
Remote payload	Remote payload
Far-end line	Far-end line
Far-end payload	Far-end payload
	V.54

About **V.54 :** An ITU standard (1976) for various loopback tests which can be incorporated into modems for testing the telephone circuit and isolating transmission problems. Operating modes include local and remote digital loopback and local and remote analog loopback.

The UM-SNB NTU supports Bit Error Rate Testing (BERT). To configure the BERT, move the cursor to **BER Test** and press [ENTER] or [RIGHT].

```
                              SHDSL.BIS NTU
--------------------------------------------------------------------------------
   Loopback           Execute Loopback
>> BerTest            Execute Local Ber Test









--------------------------------------------------------------------------------
Command:BerTest <CR>
Message: Please input the following information.

BerTest Type  (TAB Select) <2047>: 2047_


--------------------------------------------------------------------------------
<I/K> Move up/down, <J/L> Exit/Enter, <U/O> Move top/bottom
```

The BER Test screen is as following:

```
                              SHDSL.BIS NTU
--------------------------------------------------------------------------------
Monitoring Window...BER Test

Test Pattern            :          2047
Time Elapsed            :             8
Pattern Sync            :          Sync
Bit Error Count         :             0









Refresh counter:5, Press 'Ctrl+C' to quit...
--------------------------------------------------------------------------------
<I/K> Move up/down, <J/L> Exit/Enter, <U/O> Move top/bottom
```

The UM-SNB NTU includes an internal Bit Error Rate Tester (BERT) for complete testing of local and remote modem and the link quality without any need for an external test equipment. This built-in Bit Error Rate Test generator can generate a standard 2047 (2^{11}-1) test pattern.

Test Pattern: 2047	Use the standard 2047 (2^{11}-1) test pattern
Time Elapsed	Shows the time elapsed count
Pattern Framing	Shows the linking is sync or no sync
Bit Error Count	Shows the bit error counter
Refresh counter	Page refresh counter

You can press CTRL-C to quit this page anytime.

About 2047 (2^{11}-1) test pattern: This is the pseudorandom sequence is based on an eleven (11) bit shift register, a pseudorandom pattern with a maximum of 10 sequential zeros and 11 sequential ones.

5.10 Exit

For exiting the system without saving any configuration, you can use **exit** command to exit. Select **exit** and press [ENTER] or [RIGHT]. Answer y(es) to confirm.

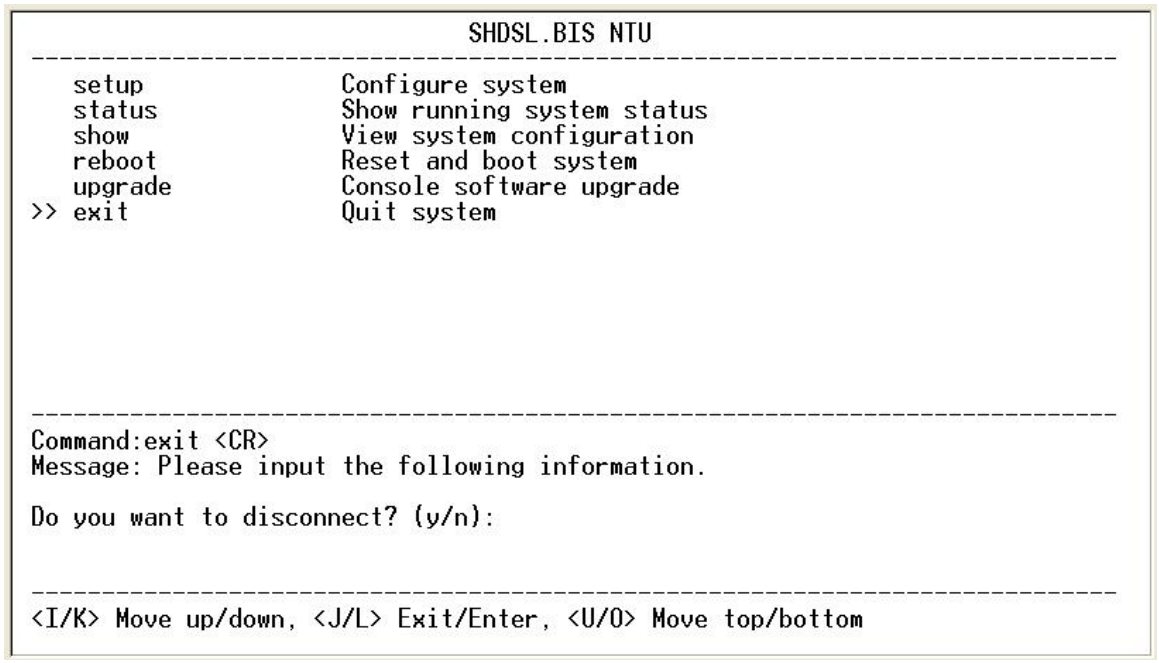

After press [ENTER], the system will be disconnected.

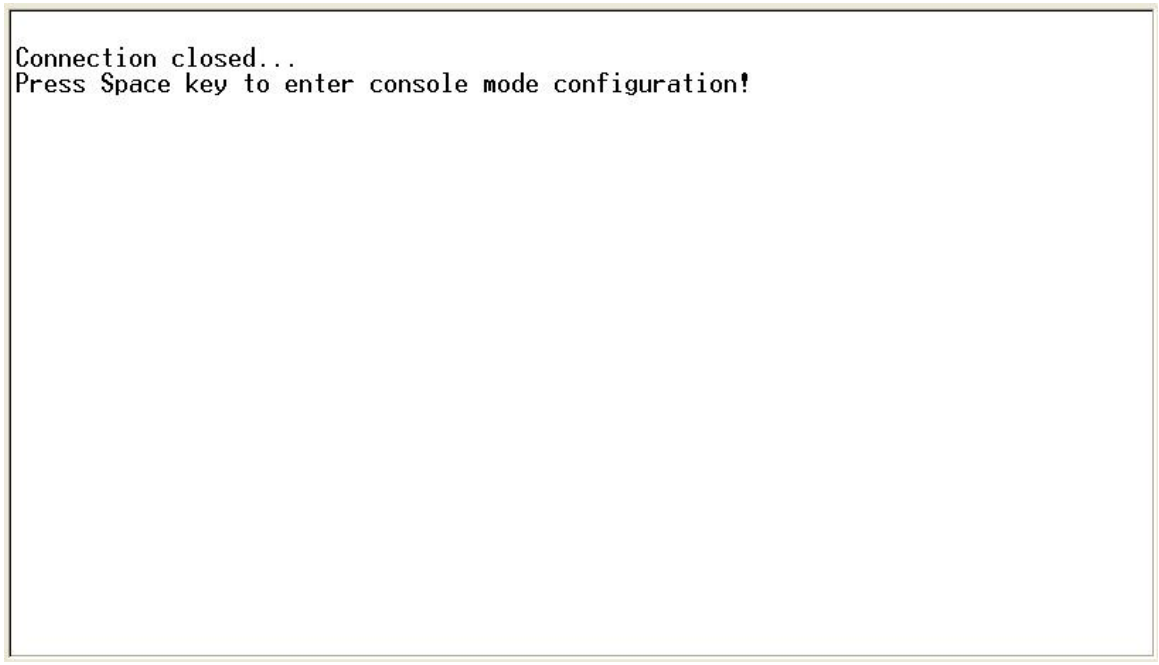

When the system has been disconnected, user can see the close screen. You can press Space key to restart.

The new login screen will be shown again, you can type username and password again to enter.

6. Appendix

6.1 Abbreviation

AIS	Alarm Indication Signal
AMI	Alternate mark inversion
ASYM	Asymmetric
ATM	Asynchronous Transfer Mode
B8ZS	Bipolar with 8 zero substitution
BER	Bit error rate
BERT	Bit Error Rate Tester
BNC	Bayonet Nut Coupling Bayonet Neill-Concelman Barrel Nut Connector Bayonet Nipple Connector Bayonet Navy Connector Baby N Connector
bps	Bits per second
CAS	Channel Associated Signaling
CEPT	European Conference of Postal and Telecommunications Administrations.
CERR	CRC Errors
CO	Central Office
CPE	Customer Premises Equipment
CPU	Central processing unit
CRC	Cyclic redundancy check
CRC4	Cyclic redundancy check 4 bit
CRS	Carrier Sense
CSU	Channel service unit
CTS	Clear to send
DCD	Data carrier detect
DCE	Data communication equipment
DSL	Digital subscriber loop
DSR	Data set ready
DSLAM	DSL Access Multiplexer
DTE	Data terminal equipment
DTR	Data terminal ready
E BIT GEN	Remote End Block Error Bit generation
EOC	Embedded operations channel

ES	Number of Error second (Errors/Second)
ESF	Extended super frame
ETSI	European Telecommunications Standardization Institute
FAS	Frame alignment signal
FCS	Frame Check Sequence
HDB3	High-Density Bipolar of order 3
HDLC	High-Level Data Link Control
HEC	Header error check
I/F	Interface
ITU	International Telecommunication Union
ITU-T	ITU-Telecommunication Standardization Sector
LBO	Line Build Out
LIU	Line Interface Unit
LOC	Loss of Connection
LOF	Loss of frame
LOS	Loss of signal
LOSW	Loss of synchronization word
LTU	Line Termination Unit
MAS	Multi-frame Alignment Sequence (CAS Format)
MFAS	Multi-frame Alignment Sequence (CRC4 Format)
MHz	Megahertz
NI	Network Interface
NRZ	Non-Return to Zero
NTU	Network Termination Unit
PABX	Private Automatic Branch Exchange
PAM	Pulse Amplitude Modulation
PLL	Phase-locked loop
POTS	Plain Old Telephone Service
PRBS	Pseudo-Random Bit Sequence
PSD	Power spectral density
QRSS	Quasi-Random Signal Source
RAI	Remote alarm indication
RESYNC	Resynchronization
RJ-45	Registered Jack-45
RTS	Request to send
RX	Receiver
SES	Number of Severely error seconds (more than 832 CRC errors / second. Approximately equivalent to a bit error rate of 1 x 10^{-3}
SDLC	Synchronous data Link Control

SF	Super Frame
SHDSL	Symmetric High-BitRate Digital Subscriber Loop
SLC	Subscriber Loop Carrier
SMF	Sub-Multi frame
SNA	System Network Architecture
SNR MARGIN	Signal to noise ration margin
STU	SHDSL Terminal Unit
STU-C	SHDSL Terminal Unit - Central office side
STU-R	SHDSL Terminal Unit - Remote side
STU-C-INTCLK	STU-C internal clock
STU-R-EXTCLK	STU-R external clock
SYM	Symmetric
SYNC	Synchronization
TC-PAM	Trellis Coded Pulse Amplitude Modulation
TDM	Time Division Multiplexing
TPS-TC	Transmission Protocol Specific TC layer
TX	Transmitter
Tx Power	Transmission power
UAS	Unavailable second
UI	User interface
WAN	Wide Area Network
xDSL	“Any” DSL , (ADSL , HDSL ,SHDSL or VDSL etc)

6.2 Serial Interface Pin Assignments

The table below displays Serial Interface Pin Assignments for the DCE Mode

.

Function	Abbrev.	Direction	RS-530 DB-25(F)	V.35 M.34(F)	X.21 DB-15(F)
Frame Ground	FG	N/A	1	A	1
Transmit Data	TD	Input	2	P	2
Receive Data	RD	Output	3	R	4
Request to Send	RTS	Input	4	C	3
Clear to Send	CTS	Output	5	D	
Data Set Ready	DSR	Output	6	E	
Signal Ground	SG	N/A	7	B	8
Data Carrier Detect	DCD	Output	8	F	5
Secondary Receiver Clock	(S)RC	Output	9	X	13
Secondary Data Carrier Detect	(S)DCD	Output	10		12
Secondary External Transmitter Clock	(S)ETC	Input	11	W	7
Secondary Transmitter Clock	(S)TC	Output	12	AA	
Secondary Clear to Send	(S)CTS	Output	13		
Secondary Transmit Data	(S)TD	Input	14	S	9
Transmitter Clock	TC	Output	15	Y	
Secondary Receive Data	(S)RD	Output	16	T	11
Receiver Clock	RC	Output	17	V	6
Local Loopback			18		
Secondary Request to Send	(S)RTS	Input	19		10
Data Terminal Ready	DTR	Input	20	H	
Remote Loopback			21		
Secondary Data Set Ready	(S)DSR	Output	22		
Secondary Data Terminal Ready	(S)DTR	Input	23		
External Transmitter Clock	ETC	Input	24	U	14
Test Indicator			25		

The front view of DB-25(F) Serial interface connector on rear panel:

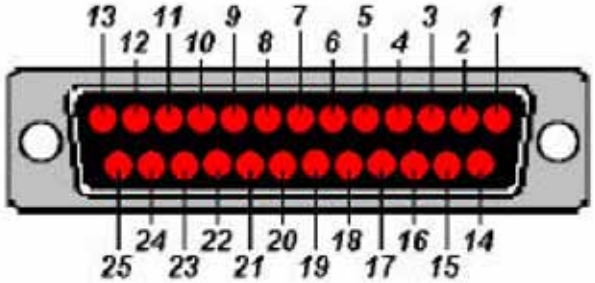

DB-25(F) Connector

6.3 V.35 DB25(M) to M.34(F) adaptor Cable

If the DTE (Data Terminal Equipment) connector is using 34-pin Winchester type, we must use the cable adaptor from DB-25 to Winchester (M.34).

The pin out of cable on DB-25(male) Connector to M.34(female) Connector:

DB-25 Pin	Signal	M.34 Pin	Description
2	TD	P	Transmit Data
14	TD	S	Transmit Data
3	RD	R	Receive Data
16	RD	T	Receive Data
4	RTS	C	Ready To Send
5	CTS	D	Clear To Send
6	DSR	E	Data Set Ready
20	DTR	H	Data Terminal Ready
24	XTC	U	DTE Transmit Clock
11	XTC	W	DTE Transmit Clock
15	TC	Y	Transmit Clock
12	TC	AA	Transmit Clock
17	RC	V	Receive Clock
9	RC	X	Receive Clock
1	FGND	A	Protective Ground
7	GND	B	Signal Ground
8	DCD	F	Data Carrier Detect

The front view of DB-25(M) connector and V.35(F) connector on this cable:

V.35 is a partially balanced, partially single-ended interface specification. The data leads and clock leads are balanced; the handshake leads are single-ended.

TD, RD, TC, RC and XTC are differential signals conforming to RS-422/V.11. Remaining control and handshake signals (RTS, CTS, DSR and DTR) are conformed to RS-232 as unbalanced.

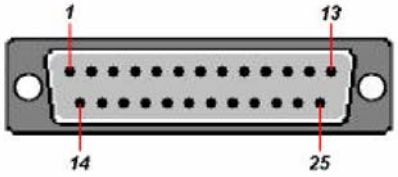

DB-25(M) connector

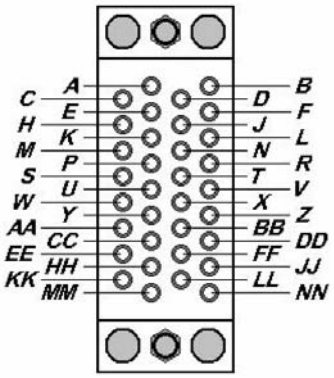

M.34(F) connector

V.35 interface (34-pin Winchester type) contains the following signals:

Pin	Signal	Abbr.	DTE	DCE
A	Chassis Ground	FGND	---	---
B	Signal Ground	GND	---	---
C	Request To Send	RTS	Out	In
D	Clear To Send	CTS	In	Out
E	Data Set Ready	DSR	In	Out
F	Data Carrier Detect	DCD	In	Out
H	Data Terminal Ready	DTR	Out	In
J	Unassigned			
K	Unassigned			
L	Unassigned			
M	Unassigned			
N	Unassigned			
P	Send Data A	SD(A)	Out	In
R	Receive Data A	RD(A)	In	Out
S	Send Data B	SD(B)	Out	In
T	Receive Data B	RD(B)	In	Out
U	Terminal Timing A	SCTE(A)	Out	In
V	Receive Timing A	SCR(A)	In	Out
W	Terminal Timing B	SCTE(B)	Out	In
X	Receive Timing B	SCR(B)	In	Out
Y	Send Timing A	SCT(A)	In	Out
Z	Unassigned			
AA	Send Timing B	SCT(B)	In	Out
BB	Unassigned			
CC	Unassigned			
DD	Unassigned			
EE	Unassigned			
FF	Unassigned			
HH	Unassigned			
JJ	Unassigned			
KK	Unassigned			
LL	Unassigned			
MM	Unassigned			
NN	Unassigned			

6.4 X.21 DB25(M) to DB15(F) adaptor Cable

For X.21 application, we must use the DB-25 to DB-15 adaptor cable for connects to a X.21 DTE DB-15 male cable.

The pin out of cable on DB-25(male) Connector to DB-15(Female) (X.21) Connector

DB-25 Pin	Signal	DB-15 (X.21) Pin	Description
1	FGND	1	Protective Ground
7	GND	8	Signal Ground
2	T	2	Transmit Data
14	T	9	Transmit Data
3	R	4	Receive Data
16	R	11	Receive Data
4	C	3	Request To Send
19	C	10	Request To Send
8	I	5	Data Carrier Detect
10	I	12	Data Carrier Detect
17	S	6	Receive Clock
9	S	13	Receive Clock

All signals are balanced. Meaning there is always a pair (+/-) for each signal, like used in RS422. The X.21 signals are the same as RS422, so please refer to RS422 for the exact details.

The front view of DB-25(M) connector and DB-15(F) connector on this cable:

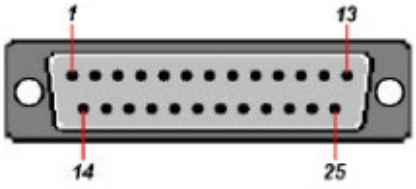

DB-25(M) Connector

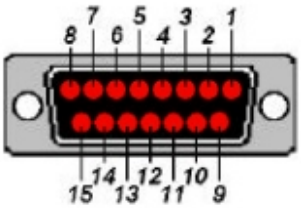

DB-15(F) Connector

The pin out of DB-15 connector on X.25 adaptor cable:

Pin	Signal	Abbr.	DTE	DCE
1	Shield	--	--	--
2	Transmit (A)	TA	Out	In
3	Control (A)	CA	Out	In
4	Receive (A)	RA	In	Out
5	Indication (A)	IA	In	Out
6	Signal Timing (A)	SA	In	Out
7	Unassigned			
8	Ground	--	--	--
9	Transmit (B)	TB	Out	In
10	Control (B)	CB	Out	In
11	Receive (B)	RB	In	Out
12	Indication (B)	IB	In	Out
13	Signal Timing (B)	SB	In	Out
14	Unassigned			
15	Unassigned			

Functional Description:

The Signal Element Timing (clock) (S) is provided by the DCE. This means that the NTU is output the correct clocking and that X.21 is a synchronous interface. Hardware handshaking is done by the Control (C) and Indication (I) lines. The Control is used by the DTE and the Indication is the DCE one.

6.5 Console Cable

The front view of RJ-45 console cable socket on rear panel:

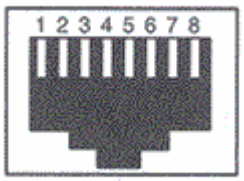

The wire connection of console cable DB-9(Female) to RJ-45:

DB9 (Female)		RJ-45	
1	DCD	1	DSR
2	RXD	2	DCD
3	TXD	3	DTR
4	DTR	4	GND
5	GND	5	RXD
6	DSR	6	TXD
7	RTS	7	CTS
8	CTS	8	RTS
9	NC		

The signal direction of console cable:

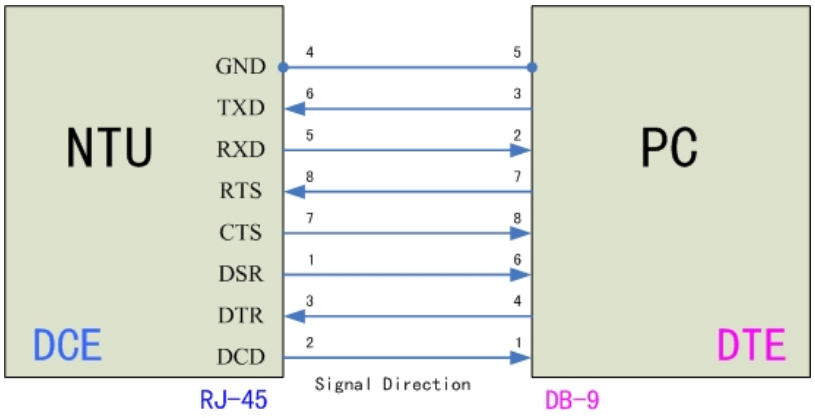

The pin assignment of RJ-45 modular jack on the console cable:

Pin Number	Abbrev.	Description	Figure
1	DSR	DCE ready	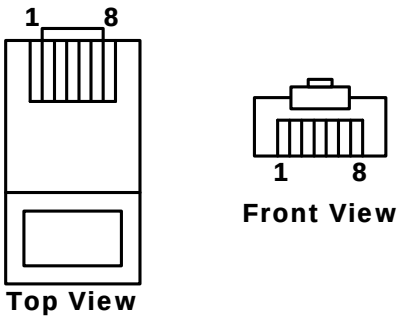
2	DCD	Received Line Signal Detector	
3	DTR	DTE ready	
4	GND	Signal Ground	
5	RXD	Received Data	
6	TXD	Transmitted Data	
7	CTS	Clear to Send	
8	RTS	Request to Send	

6.6 E1/T1 Balanced Cable

The front view of RJ-48C E1/T1 balance cable socket on rear panel:

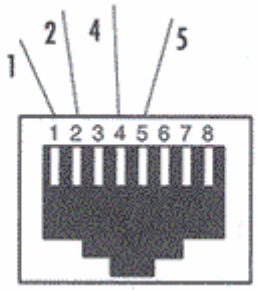

The pin out of RJ-48C plug on the G.703 120Ω E1/T1 balanced cable:

Pin Number	Description	Figure
1	E1/T1 interface receive pair-ring	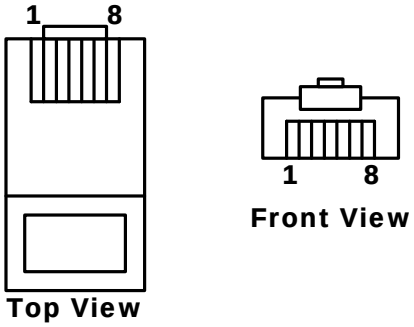
2	E1/T1 interface receive pair-tip	
3	No connection	
4	E1/T1 interface transmit pair-ring	
5	E1/T1 interface transmit pair-tip	
6	No connection	
7	No connection	
8	No connection	

The pin out of cable on DB-15(female) Connector to RJ-48C Connector:

DB15(Female) Pin Number	RJ-48C Pin number	Description
11	4	Transmit Ring
5	3	Rx Shield
9	1	Receive Ring
6	6	TX Shield
3	5	Transmit Tip
1	2	Receive Tip

6.7 E1 Unbalanced Cable

Connections to the E1 BNC ports are made using a 75-ohm coaxial cable with a bayonet-style twist-lock BNC connector. We do not provide the cable. It is widely available from other sources.

The front view of BNC sockets on rear panel:

The internal wiring between BNC sockets and RJ-48C:

Signal Name	BNC Connecters	RJ-48C Connector
Transmit Tip	Center pin of Tx Connector	5
Transmit Ring	Shield of Tx Connector	4
Receive Tip	Center pin of Rx Connector	2
Receive Ring	Shield of Rx Connector	1

6.8 Ethernet Cable

The Ethernet cables should be 4 pair unscreened cable (UTP) or screened (STP) of type CAT5 (or higher). Both crossed and normal wiring styles are supported by the auto-crossover feature of the NTU.

We do not provide the cable. It is widely available from other sources.

The front view of RJ-45 Ethernet cable socket on rear panel:

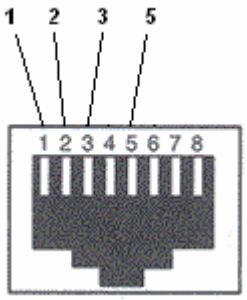

The pin out of RJ-45 Ethernet Connector:

Pin number	Signal Name
1	Transmit Data +
2	Transmit Data -
3	Receive Date +
4	Not used
5	Not used
6	Receive Date -
7	Not used
8	Not used

6.9 DSL Cable

The front view of DSL cable socket on rear panel:

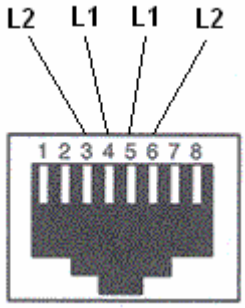

The pin out of RJ-45 modular jack on DSL cable:

Pin Number	Description	Figure
1	No connection	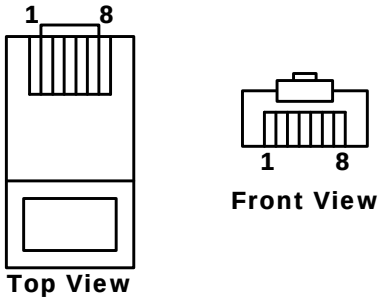
2	No connection	
3	LOOP 2 Input/Output	
4	LOOP 1 Input/Output	
5	LOOP 1 Input/Output	
6	LOOP 2 Input/Output	
7	No connection	
8	No connection	

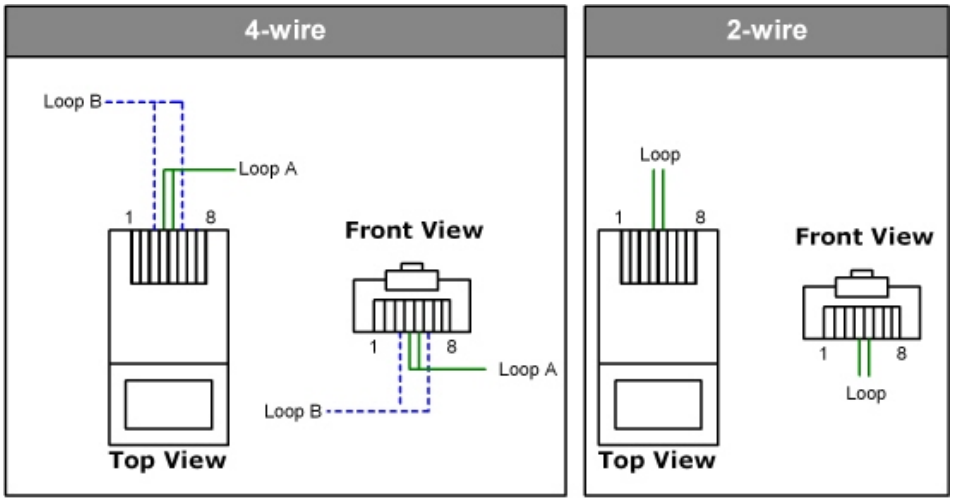

	DSL loop
2-wires (1 Pair) Model	Pin 4,5

	DSL loop A	DSL loop B
4-wires (2 Pair) Model	Pin 4,5	Pin 3,6

6.10 Power Cord

The front view of IEC-320 C6 type AC Inlet on rear panel:

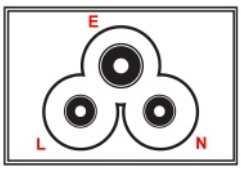

The pin out of AC Inlet connector:

Pin number	Description
E	Earth conductor
L	Live, hot or active conductor
N	Neutral or identified conductor

The socket of the power cord is using IEC-320 C5 type. This 3-connector colloquially called “Mickey Mouse” or “Clover Leaf”.

The front view of C5 line socket of the power cord:

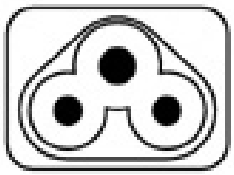

6.11 Illustration of Loopback connection device (E1)

RJ-48C Pin number	Description
4	Transmit Ring
3	Rx Shield
1	Receive Ring
6	TX Shield
5	Transmit Tip
2	Receive Tip

Make the short circuit/wiring with a RJ-45 module jack of the following:

PIN1←----→PIN4
PIN2 ←----→PIN5

The top view of RJ-45 module jack on short circuit/wiring:

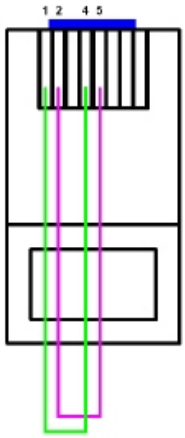

6.12 Illustration of Loopback connection device (Serial)

DB-25(M) Pin number	Signal	Description
2	TD(A)	Transmit Data
14	TD(B)	Transmit Data
3	RD(A)	Receive Data
16	RD(B)	Receive Data
4	RTS	Ready To Send
5	CTS	Clear To Send
6	DSR	Data Set Ready
20	DTR	Data Terminal Ready
24	XTC	DTE Transmit Clock
11	XTC	DTE Transmit Clock
15	TC(A)	Transmit Clock
12	TC(B)	Transmit Clock
17	RC(A)	Receive Clock
9	RC(B)	Receive Clock
1	FGND	Protective Ground
7	GND	Signal Ground
8	DCD	Data Carrier Detect

Make the short circuit/wiring with a DB-25(male) connector of the following:

PIN2 ←----→PIN3

PIN14←---→PIN16

PIN4 ←----→PIN5

PIN6 ←---→PIN20
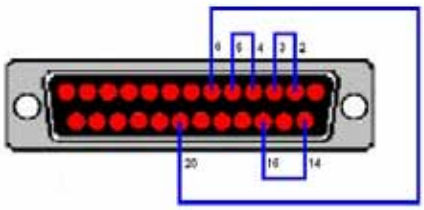
The back side view of DB-15(male) connector on short circuit/wiring: